# Repair Parts

COUNTRY CLIPPER
ZERO TURN MOWER

# CHALLENGER

# D530 / D530W

**SERIAL RANGE: 26264001 - _____**

P-13824 (Rev B)

# COUNTRY CLIPPER
# CHALLENGER - D530 / D530W
## SERIAL RANGE 26264001 - _____
## ZERO TURN RADIUS MOWER
## TABLE OF CONTENTS


SECTION 1 – MOWER DECKS AND RELATED PARTS

1. 52” DECK ASSEMBLY
2. 60” DECK ASSEMBLY
3. DISCHARGE CHUTE ASSEMBLY
4. DECK SPINDLE ASSEMBLY
5. DOUBLE IDLER DRIVE BELT IDLER
6. BELT TENSION LEVER
7. FIXED IDLERS & RELATED PARTS
8. DECK LIFT ASSEMBLY & RELATED PARTS
9. DECK LIFT ASSEMBLY & RELATED PARTS (CON’T)
10. CUT HEIGHT ASSEMBLY & RELATED PARTS

SECTION 2 – TRACTOR FRAME AND RELATED PARTS

11. PIVOTING FRONT AXLE & FOOT PAN
12. TIRES AND FRONT STEP
13. FRONT PANEL ASSEMBLY & RELATED PARTS
14. FRONT PANEL ASSEMBLY & RELATED PARTS (CON’T)
15. BATTERY BOX & ROPS POSTS
16. ROPS ASSEMBLY
17. BRAKE ASSEMBLY
18. BRAKE ASSEMBLY (CON’T)

SECTION 3 – TRACTOR DRIVE AND RELATED PARTS

19. FUEL TANK ASSEMBLY & BATTERY HOLD DOWN
20. JOYSTICK CONTROL & RELATED PARTS
21. JOYSTICK ASSEMBLY
22. JOYSTICK ASSEMBLY MOUNTING & RELATED PARTS
23. TWIN LEVER CONTROL & RELATED PARTS
24. TWIN LEVER ASSEMBLY
25. CONTROL PANEL
26. FENDER ASSEMBLY & RELATED PARTS
27. TRANSMISSION ASSEMBLY & RELATED PARTS
28. DAMPER, OFFSET BRACKET, & RETURN TO NEUTRAL HARDWARE
29. SEAT BASE & ISOLATORS
30. SEAT, ARM RESTS, & RELATED PARTS
31. ENGINE
32. ENGINE & CLUTCH MOUNTING & RELATED PARTS
33. WIRE HARNESS & RELATED PARTS
34. WIRE HARNESS SCHEMATIC


Country Clipper Division, Shivvers Manufacturing Inc. 613 W English St. Corydon, IA 50060-0467 Ph. 641-872-2544 Fax. 641-872-1593

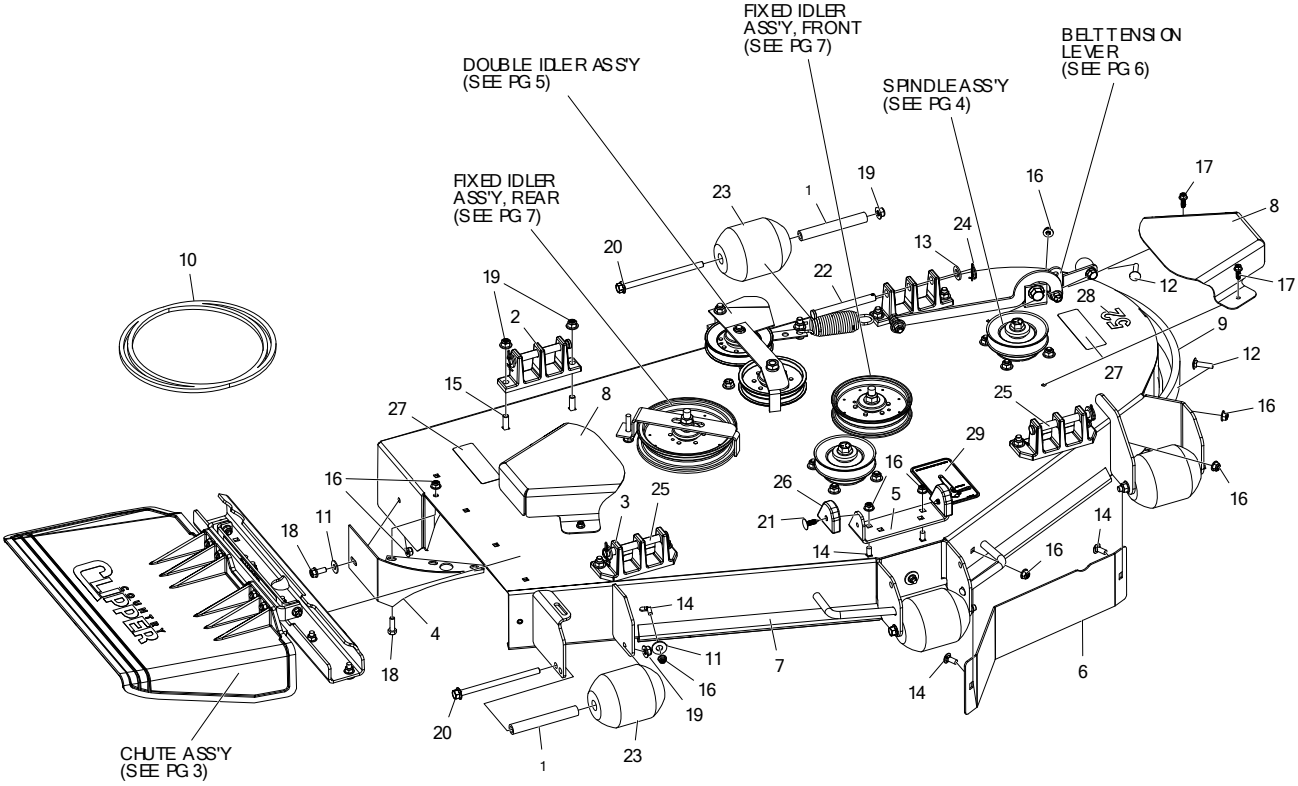


| ITEM # | QTY | PART # | DESCRIPTION |
|---|---|---|---|
| 1 | 5 | 609-183P | BUSHING |
| 2 | 2 | 643-016W | DECK HANGER NARROW BASE |
| 3 | 2 | 651-009W | DECK HANGER WIDE BASE |
| 4 | 1 | 686-080W | SPLITTER DISCHARGE |
| 5 | 1 | 722-034P | DECK STOP |
| 6 | 1 | 722-041P | DEFLECTOR PLATE |
| 7 | 1 | 722-054A | 52" DECK W/ DECALS |
| 8 | 2 | 722-033P | PULLEY COVER |
| 9 | 1 | 724-156P | WEAR STRIP, PLASTIC |
| 10 | 1 | D-3951 | BANDL BELT B-166 |
| 11 | 3 | F-1009-02 | WASHER FLAT |
| 12 | 2 | F-1106 | BOLT, CARRIAGE, 5/16-18 X 1-1/4", G5, ZC |
| 13 | 4 | F-1521 | WASHER 1/2" CUSTOM YZ |
| 14 | 6 | F-1671 | CARRIAGE BOLT 5/16-18 X 3/4" YZ, GR5 |
| 15 | 8 | F-1672 | BOLT CARRIAGE 3/8-16 X 1-1/4" YZ GR5 |
| 16 | 11 | F-2063 | NUT 5/16-18, NYLOC, FLANGED, YZ |
| 17 | 4 | F-2119 | FHCS 1/4-20 X 3/4" YZ GR5 LOCK PATCH |
| 18 | 3 | F-2120 | FHCS 5/16-18 X 3/4"X YZ, GR5 |
| 19 | 13 | F-2151 | NUT 3/8-16 NYLOC FLANGED YZ |
| 20 | 5 | F-2161 | FHCS 3/18-16 X 6" YZ GR5 |
| 21 | 2 | F-2250 | CLIP FIR TREE 1/4" X 1" BLACK NYLON |
| 22 | 2 | F-2389 | 1/2" X 5" CLEVIS PIN |
| 23 | 5 | H-1948 | ROLLER 3-3/4 DIA |
| 24 | 4 | H-2239 | 1/2" RUE RING |
| 25 | 2 | H-2240 | 1/2" X 4-1/2" CLEVIS PIN |
| 26 | 2 | H-3091 | WEAR PAD |
| 27 | 2 | P-13749 | DECAL, DECK SAFETY |
| 28 | 1 | P-11951 | DECAL DECK SIZE 52 |
| 29 | 1 | P-12837 | DECAL DECK BELT ROUTING |

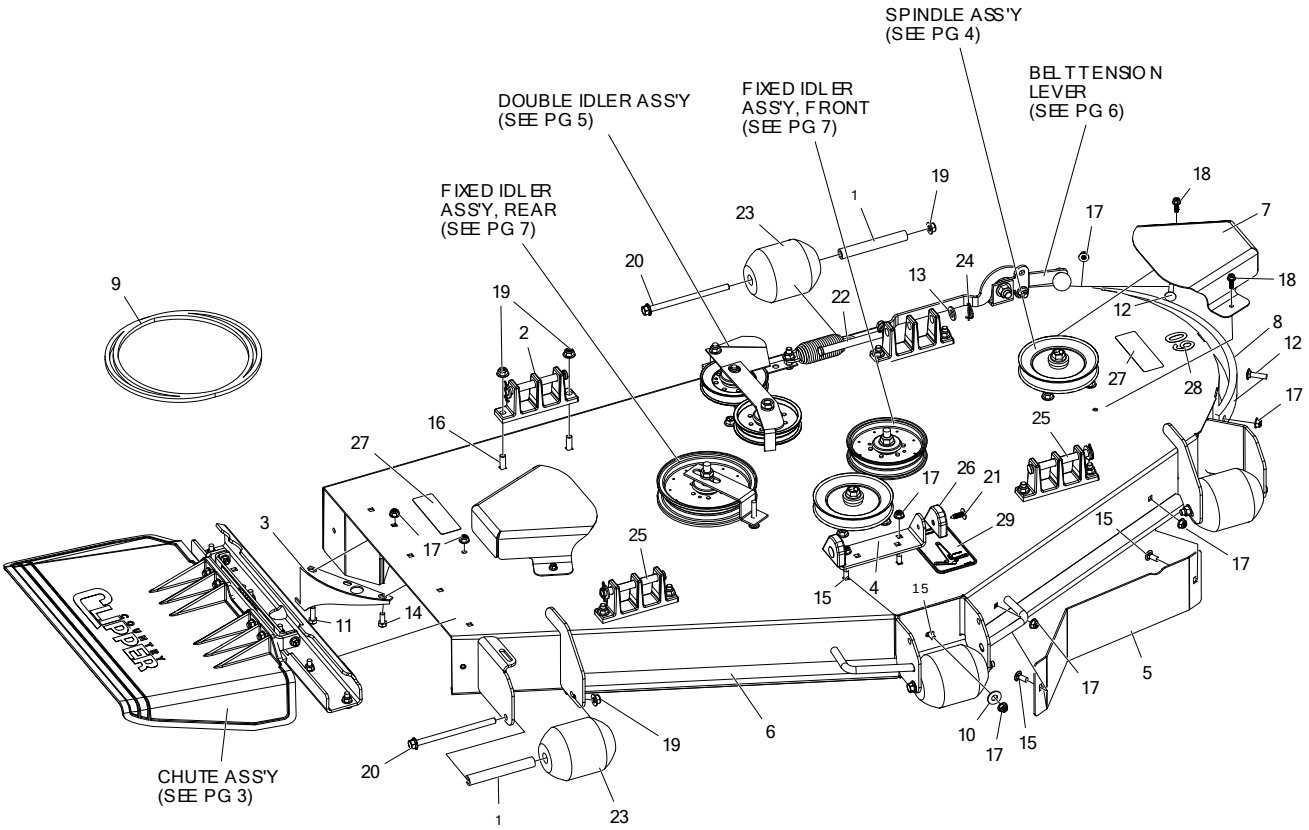


| ITEM # | QTY | PART # | DESCRIPTION |
|---|---|---|---|
| 1 | 5 | 609-183P | BUSHING |
| 2 | 4 | 643-016W | DECK HANGER, NARROW BASE |
| 3 | 1 | 686-006W | SPLITTER WELDMENT |
| 4 | 1 | 722-034P | DECK STOP |
| 5 | 1 | 722-041P | DEFLECTOR PLATE |
| 6 | 1 | 722-055A | 60" DECK W/ DECALS |
| 7 | 2 | 722-033P | PULLEY COVER |
| 8 | 1 | 730-015P | WEAR STRIP, PLASTIC |
| 9 | 1 | D-3776-W | BELT B-180" |
| 10 | 2 | F-1009-02 | WASHER, FLAT |
| 11 | 1 | F-2148 | FHCS, 5/16-18 X 1", YZ, GR5 |
| 12 | 2 | F-1106 | BOLT, CARRIAGE, 5/16-18 X 1-1/4", G5, ZC |
| 13 | 4 | F-1521 | WASHER, 1/2" CUSTOM, YZ |
| 14 | 1 | F-2120 | FHCS, 5/16-18 X 3/4" |
| 15 | 6 | F-1671 | CARRIAGE BOLT,5/16-18 X 3/4", YZ, GR5 |
| 16 | 8 | F-1672 | BOLT, CARRIAGE, 3/8-16 X 1-1/4", YZ, GR5 |
| 17 | 8 | F-2063 | NUT, 5/16-18, NYLOC, FLANGED, YZ |
| 18 | 4 | F-2119 | FHCS, 1/4-20 X 3/4", YZ, GR5, LOCK PATCH |
| 19 | 13 | F-2151 | NUT, 3/8-16 NYLOC, FLANGED, YZ |
| 20 | 5 | F-2161 | FHCS, 3/18-16 X 6" YZ, GR5 |
| 21 | 2 | F-2250 | CLIP, FIR TREE, 1/4" X 1", BLACK NYLON |
| 22 | 2 | F-2389 | 1/2" X 5" CLEVIS PIN |
| 23 | 5 | H-1948 | ROLLER, 3-3/4 DIA |
| 24 | 4 | H-2239 | 1/2" RUE RING |
| 25 | 2 | H-2240 | 1/2" X 4-1/2" CLEVIS PIN |
| 26 | 2 | H-3091 | WEAR PAD |
| 27 | 2 | P-13749 | DECAL, DECK SAFETY |
| 28 | 1 | P-11952 | DECAL, DECK SIZE, 60 |
| 29 | 1 | P-12837 | DECAL, DECK BELT ROUTING |

# DISCHARGE CHUTE ASS'Y & RELATED PARTS

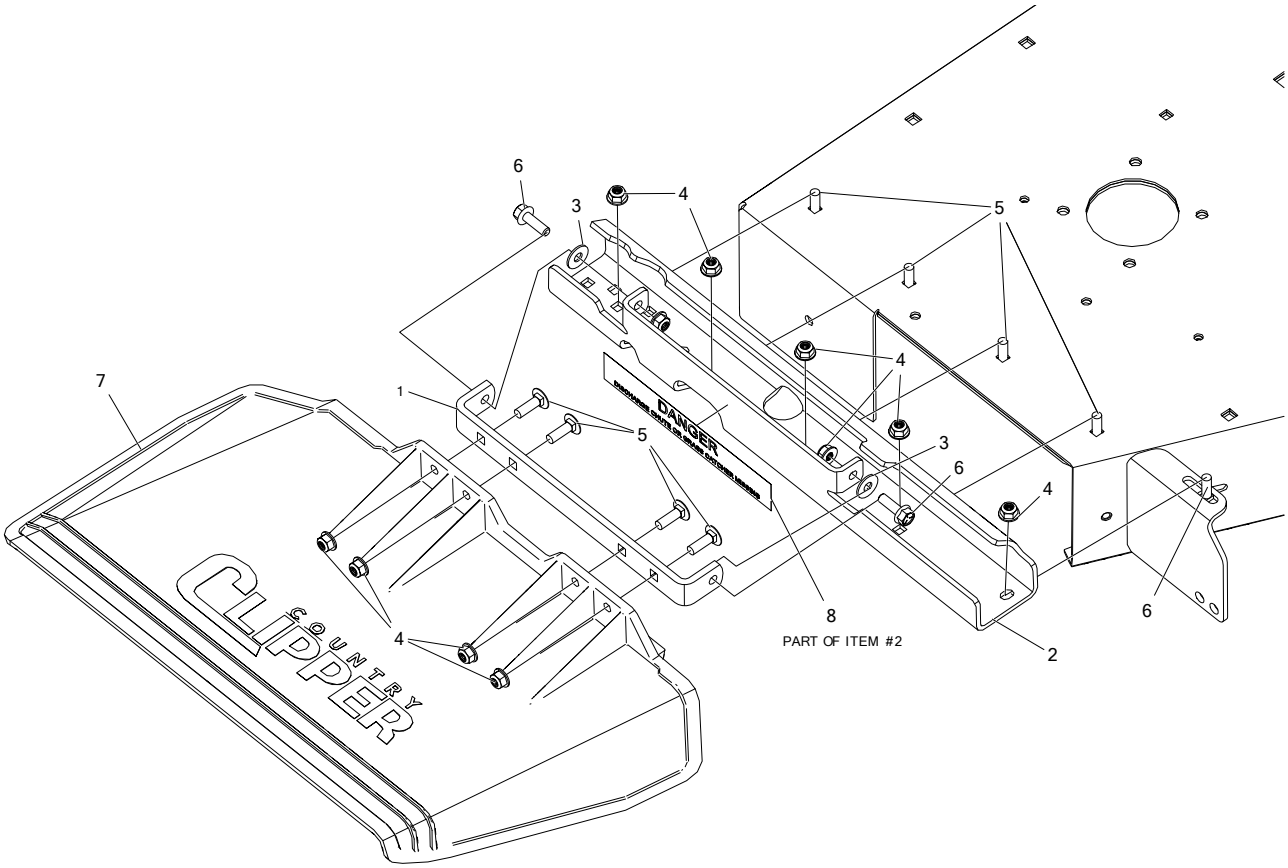


| ITEM # | QTY | PART # | DESCRIPTION |
|---|---|---|---|
| 1 | 1 | 643-110P | CHUTE HINGE |
| 2 | 2 | 643-135A | OUTLET STIFFENER W/ DECALS, SMALL |
| 3 | 2 | F-1009-02 | WASHER, FLAT |
| 4 | 11 | F-2063 | NUT, 5/16-18, NYLOC, FLANGED, YZ |
| 5 | 8 | F-2066 | BOLT, CARRIAGE, 5/16-18 X 1", YZ, GR5 |
| 6 | 3 | F-2148 | FHCS, 5/16-18 x 1", YZ, GR5 |
| 7 | 1 | H-2723 | CHUTE, DISCHARGE, SMALL |
| 8 | 1 | P-12496 | DECAL, CHUTE MISSING |

# DECK SPINDLE ASSEMBLY {D-4020}

PARTS MARKED "*" ARE PART OF COMPLETE ASSEMBLY

BLADE PART NUMBERS

52" DECK

H-2883 HIGH LIFT W/O FUSION (STANDARD)
H-2660 LOW LIFT
H-2666 GATOR

60" DECK

H-2885 HIGH LIFT W/O FUSION (STANDARD)
H-2661 LOW LIFT
H-2667 GATOR

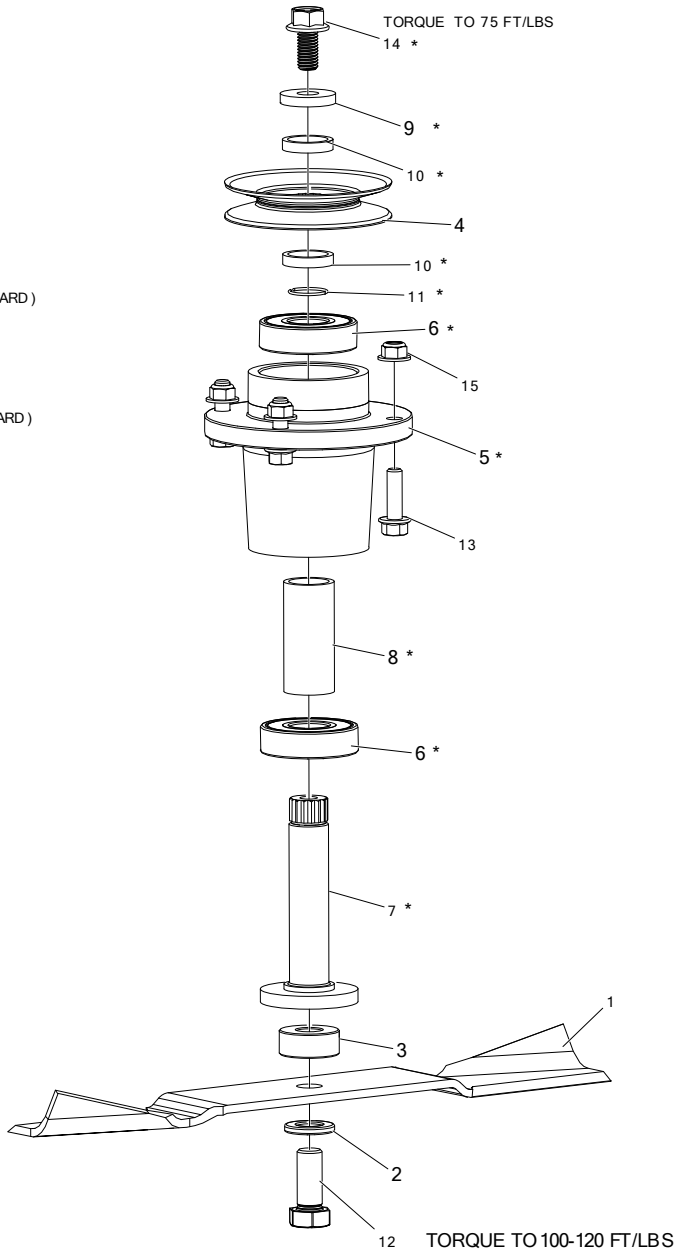


| ITEM # | QTY | PART # | DESCRIPTION |
|---|---|---|---|
| 1 | 1 | H-2883 | BLADE, HL, 18.375, 52 (STANDARD) |
| - | 1 | H-2885 | BLADE, HL, 20.953, 60 (STANDARD) |
| - | 1 | H-2660 | BLADE, 18.375 X .63, LOW LIFT, 52 |
| - | 1 | H-2661 | BLADE, 20.953 X .63, LOW LIFT, 60 |
| - | 1 | H-2666 | BLADE, 18.375 X .63, GATOR, 52 |
| - | 1 | H-2667 | BLADE, 20.86 X .63, GATOR, 60 |
| 2 | 1 | 660-099P | WASHER, BLADE, 5/8 |
| 3 | 1 | 660-206P | SPINDLE SPACER |
| 4 | 1 | D-3918 | PULLEY, 5.195, A-B, 60" DECK |
| - | 1 | D-3920 | PULLEY, 4.513, A-B, 52" DECK |
| 5 | 1 | ---- | SPINDLE HOUSING, MEDIUM DUTY |

| ITEM # | QTY | PART # | DESCRIPTION |
|---|---|---|---|
| 6 | 2 | D-4020-2 | BEARING, HCH 6305-2RS1 |
| 7 | 1 | D-4020-3 | SPINDLE SHAFT, MEDIUM DUTY |
| 8 | 1 | ---- | SPINDLE SPACER |
| 9 | 1 | D-4020-5 | SPINDLE HARD WASHER |
| 10 | 2 | D-4020-6 | PULLEY ALIGNMENT SPACER |
| 11 | 1 | D-3991 | RETAINING RING |
| 12 | 1 | F-2344 | HHCS, 5/8-11 X 1-3/4", GR5 |
| 13 | 4 | F-2125 | FHCS, 3/8-16 X 1-1/4", YZ, GR5 |
| 14 | 1 | F-2143 | FHCS, 1/2-13 X 1", YZ, GR5 |
| 15 | 4 | F-2151 | NUT, 3/8-16 NYLOC, FLANGED, YZ |
| | | | |

DOUBLE IDLER
DRIVE BELT IDLER

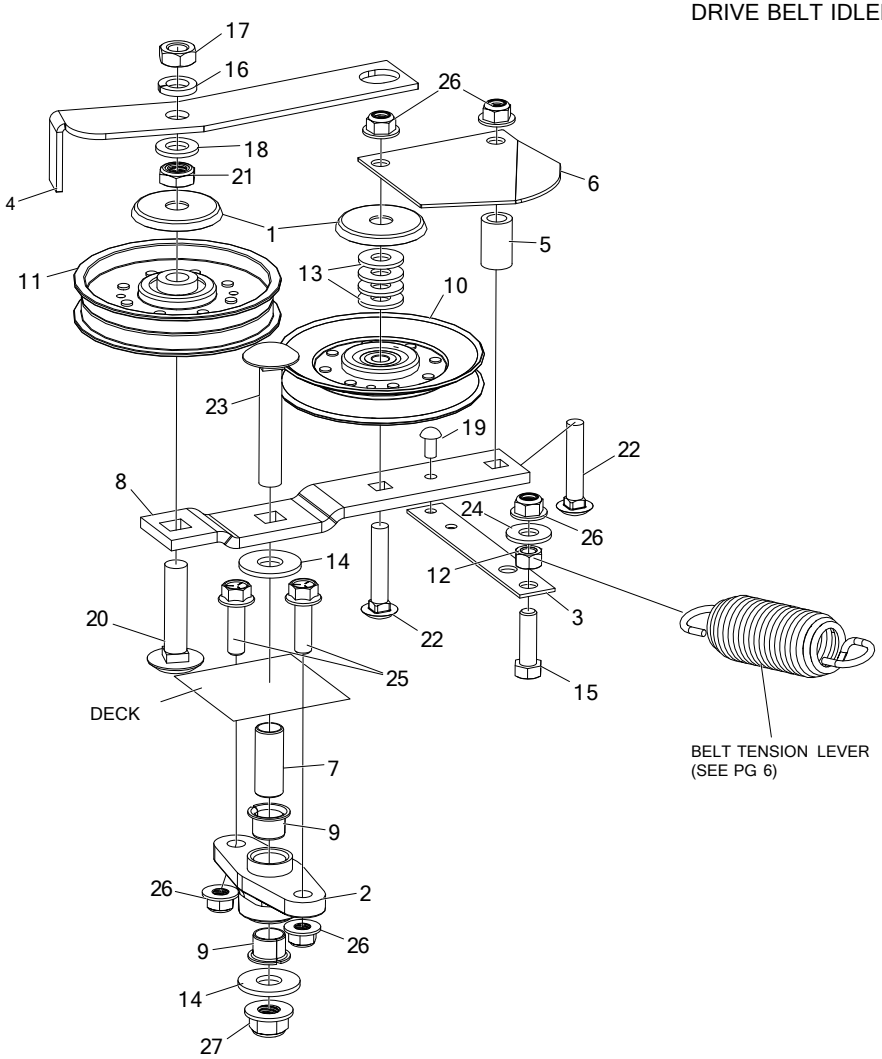


| ITEM # | QTY | PART # | DESCRIPTION |
|---|---|---|---|
| 1 | 2 | 620-201P | WASHER, BEARING CAP |
| 2 | 1 | 714-488P | MOUNT, DOUBLE IDLER |
| 3 | 1 | 660-081P | EXTENSION, SPRING |
| 4 | 1 | 660-107P | BELT KEEPER, A BELT |
| 5 | 1 | 668-021P | SPACER, BELT GUARD |
| 6 | 1 | 714-183P | BELT GUARD, 54" |
| 7 | 1 | 722-031P | MOUNTING PIN |
| 8 | 1 | 722-032P | IDLER ARM |
| 9 | 2 | D-3730 | BUSHING, DU 5/8 DIA X 1/2 LG |
| 10 | 1 | D-3923 | PULLEY, V-IDLER, 4.59OD, AB, NTN |
| 11 | 1 | D-3924 | PULLEY, FLAT IDLER, 4.25 OD, NTN, DBL INSERT |
| 12 | 1 | F-1005-03 | NUT, 3/8-16, CENTERLOCK, YZ, GR5 |
| 13 | 4 | F-1009-03 | WASHER, FLAT, 3/8, YZ |
| 14 | 2 | F-1009-05 | WASHER, FLAT STD, 1/2" NOMINAL, YZ |
| 15 | 1 | F-1307 | HHCS, 3/8-16 X 1-1/4", YZ, GR5 |
| 16 | 1 | F-1464 | LOCKWASHER, 1/2" |
| 17 | 1 | F-1489 | NUT, HEX, JAM, 1/2-13, YZ |
| 18 | 1 | F-1521 | WASHER, 1/2" CUSTOM, YZ |
| 19 | 1 | F-1733 | DRIVE SCREW, 1/4" X 1/2", RND HD |
| 20 | 1 | F-1822 | BOLT, CARRIAGE, 1/2-13 X 2-1/4", YZ, GR5 |
| 21 | 1 | F-1966 | NUT, THIN, 1/2-13, NYLOC, YZ |
| 22 | 2 | F-1976 | BOLT,CARRIAGE, 3/8-16 X 2", YZ, GR5 |
| 23 | 1 | F-2047 | CARRIAGE BOLT, 1/2-13 X 3" ZINC/YELLOW DICHROMATE FULL THREAD |
| 24 | 1 | F-2083 | WASHER, 3/8" FENDER |
| 25 | 2 | F-2125 | FHCS, 3/8-16 X 1-1/4", YZ, GR5 |
| 26 | 5 | F-2151 | NUT, 3/8-16 NYLOC, FLANGED, YZ |
| 27 | 1 | F-2152 | NUT, 1/2-13 NYLOC, FLANGED, YZ |

# BELT TENSION LEVER

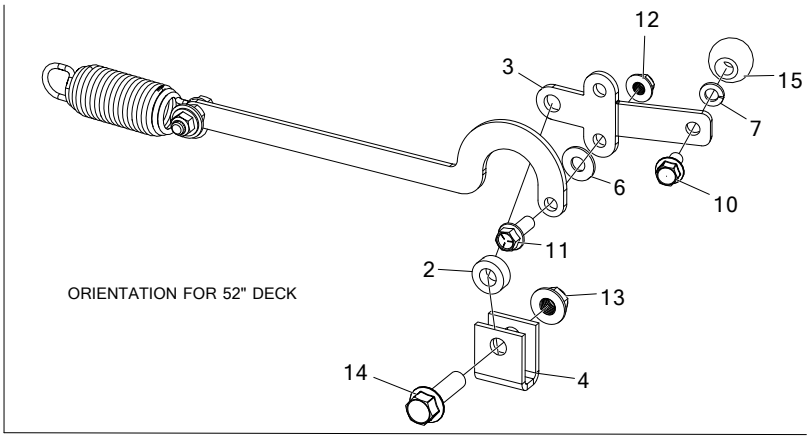


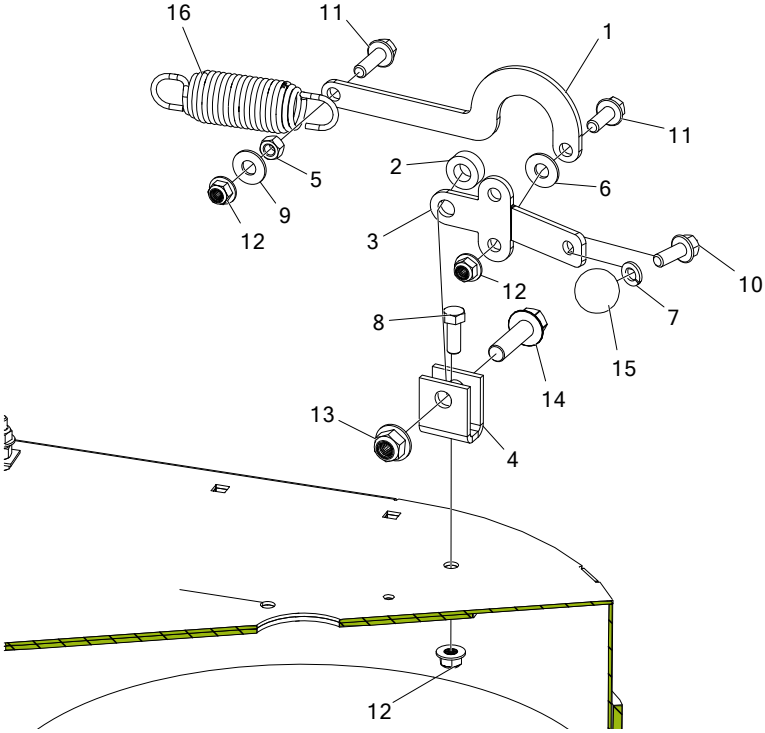


| ITEM # | QTY | PART # | DESCRIPTION |
|---|---|---|---|
| 1 | 1 | 722-040P | BELT TIGHTENER ARM, 52" DECK |
| - | 1 | 722-044P | BELT TIGHTENER ARM, 60" DECK |
| - | 1 | 660-031P | BELT TIGHTENER ARM, 48" DECK |
| 2 | 1 | 660-038P | SPACER, 3/8" WIDE |
| 3 | 1 | 660-184P | HANDLE, BELT TENSIONER |
| 4 | 1 | 661-015P | SHACKLE |
| 5 | 1 | F-1005-03 | NUT, 3/8-16, CENTERLOCK, YZ, GR5 |
| 6 | 1 | F-1009-03 | WASHER, FLAT, 3/8, YZ |
| 7 | 1 | F-1019-03 | LOCKWASHER, HVY, 3/8, YZ |
| 8 | 1 | F-1394 | HHCS,3/8-16NC X 1",GR.5, YELLOW PLATED |
| 9 | 1 | F-2083 | WASHER, 3/8" FENDER |
| 10 | 1 | F-2124 | FHCS, 3/8-16 X 3/4", YZ, GR5 |
| 11 | 2 | F-2141 | FHCS, 3/8-16 X 1 |
| 12 | 3 | F-2151 | NUT, 3/8-16 NYLOC, FLANGED, YZ |
| 13 | 1 | F-2152 | NUT, 1/2-13 NYLOC, FLANGED, YZ |
| 14 | 1 | F-2154 | FHCS, 1/2-13 x 1-3/4", YZ, GR5 |
| 15 | 1 | H-2405 | BALL, 1-1/4" |
| 16 | 1 | H-2619 | SPRING, 5 X 1-1/2, TAPERED ENDS |

# FIXED IDLER ASSEMBLIES

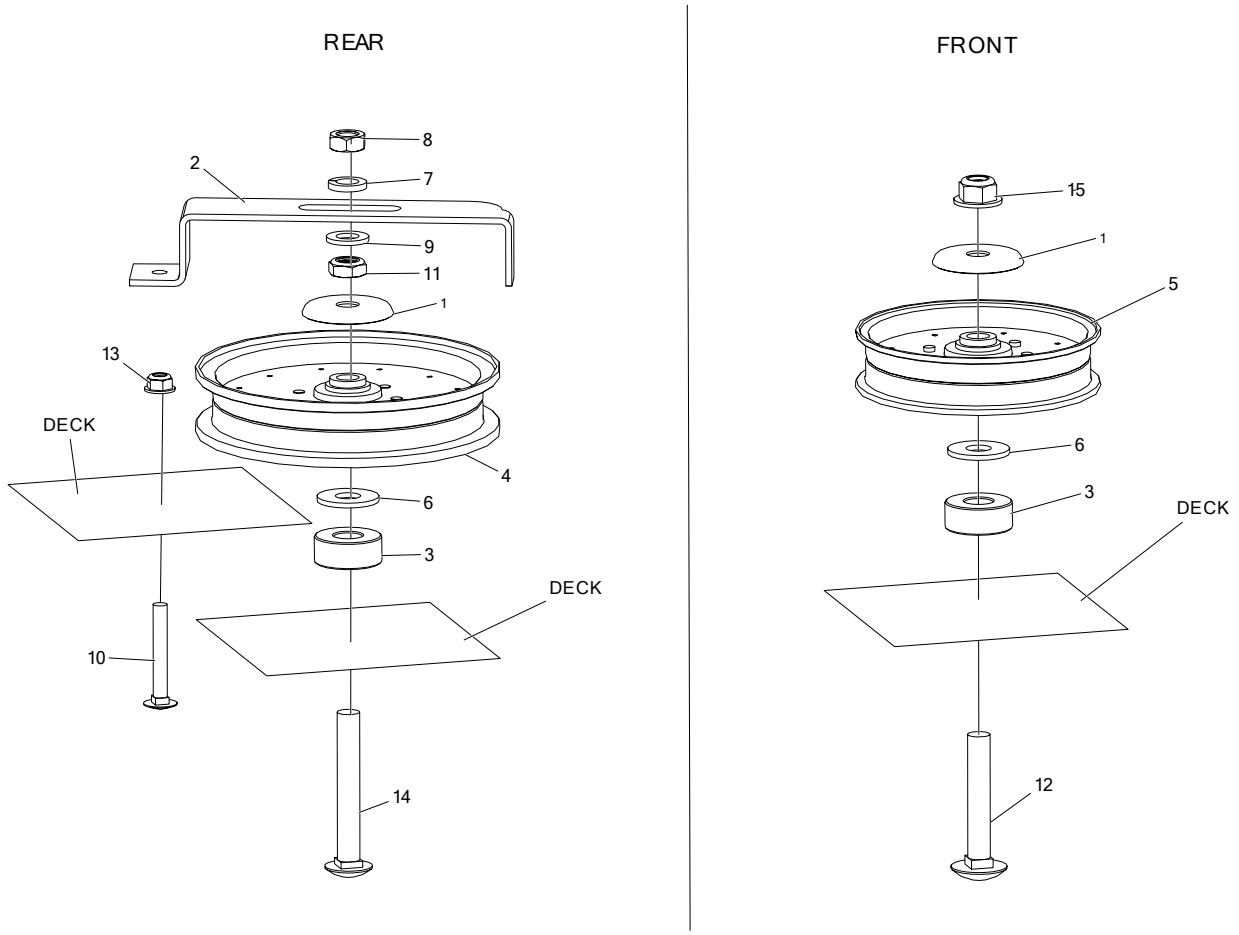


| ITEM # | QTY | PART # | DESCRIPTION |
|---|---|---|---|
| 1 | 2 | 620-201P | WASHER, BEARING CAP |
| 2 | 1 | 660-112P | BELT KEEPER, 52" DECK |
| - | 1 | 660-114P | BELT KEEPER, 60" DECK |
| 3 | 2 | 660-206P | SPINDLE SPACER |
| 4 | 1 | D-3903 | PULLEY, FLAT IDLER, 6" (NTN) |
| 5 | 1 | D-3904 | PULLEY, FLAT IDLER, 5" |
| 6 | 2 | F-1009-05 | WASHER, FLAT STD, 1/2" NOMINAL, YZ |
| 7 | 1 | F-1464 | LOCKWASHER, 1/2" |
| 8 | 1 | F-1489 | NUT, HEX, JAM, 1/2-13, YZ |
| 9 | 1 | F-1521 | WASHER, 1/2" CUSTOM, YZ |
| 10 | 1 | F-1707 | CARRIAGE BOLT, 5/16-18 X 2-1/4 ZINC PLATED |
| 11 | 1 | F-1966 | NUT, THIN, 1/2-13, NYLOC, YZ |
| 12 | 1 | F-2047 | CARRIAGE BOLT, 1/2-13 X 3" ZINC/YELLOW DICHROMATE FULL THREAD |
| 13 | 1 | F-2063 | NUT, 5/16-18, NYLOC, FLANGED, YZ |
| 14 | 1 | F-2106 | BOLT, CARRIAGE, 1/2-13 X 3-1/2", YZ, GR5 |
| 15 | 1 | F-2152 | NUT, 1/2-13 NYLOC, FLANGED, YZ |

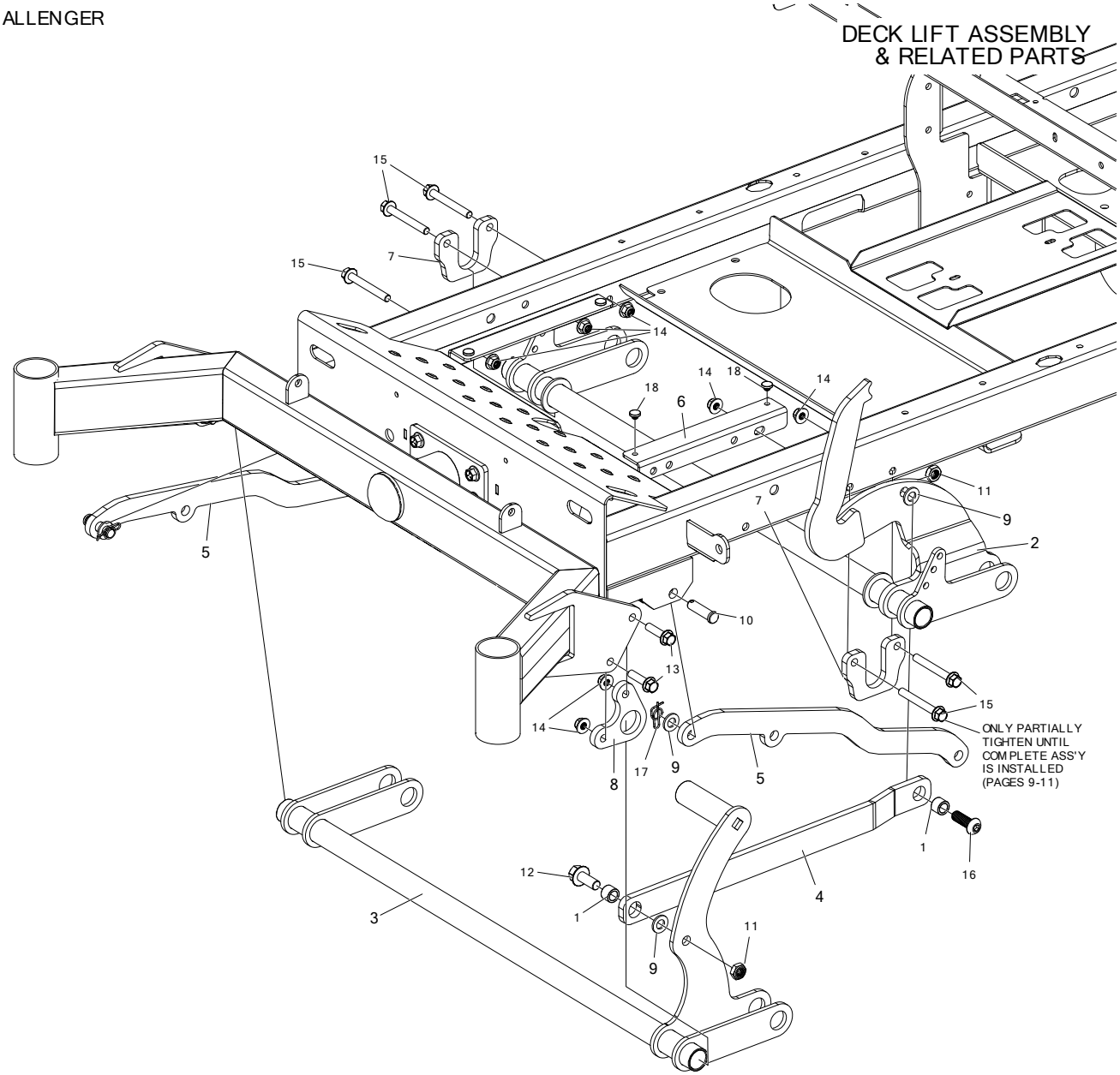


| ITEM # | QTY | PART # | DESCRIPTION |
|---|---|---|---|
| 1 | 2 | 720-010P | CLAMP EXTENSION |
| 2 | 1 | 720-079W | WLDT, DECK LIFT, REAR |
| 3 | 1 | 720-133W | WLDT, DECK LIFT, FRONT |
| 4 | 1 | 720-090P | DECK LIFT LINK |
| 5 | 2 | 720-093P | DRAG BAR |
| 6 | 2 | 720-094P | FLOOR PAN SUPPORT |
| 7 | 2 | 724-032P | DECK PIVOT MOUNT PLATE |
| 8 | 2 | 724-033P | DECK SUSPENSION FRONT PLATE |
| 9 | 4 | F-1521 | WASHER, 1/2" CUSTOM, YZ |
| 10 | 2 | F-1896 | CLEVIS PIN, 1/2 X 1-3/4", YZ |
| 11 | 2 | F-1966 | NUT, THIN, 1/2-13, NYLOC, YZ |
| 12 | 1 | F-2127 | FHCS, 1/2-13 X 1-1/4", YZ, GR5 |
| 13 | 4 | F-2147 | FHCS, 3/8-16 X 1-1/2", YZ, GR5 |
| 14 | 9 | F-2151 | NUT, 3/8-16 NYLOC, FLANGED, YZ |
| 15 | 5 | F-2180 | FHCS, 3/8-16 x 3", YZ, GR5 |
| 16 | 1 | F-2278 | BUTTON SHCS, 1/2-13 X 1-1/2, YZ |
| 17 | 2 | H-2239 | 1/2" RUE RING |
| 18 | 4 | H-2461 | RUBBER BUMPER |

# DECK LIFT ASSEMBLY & RELATED PARTS (CON'T)

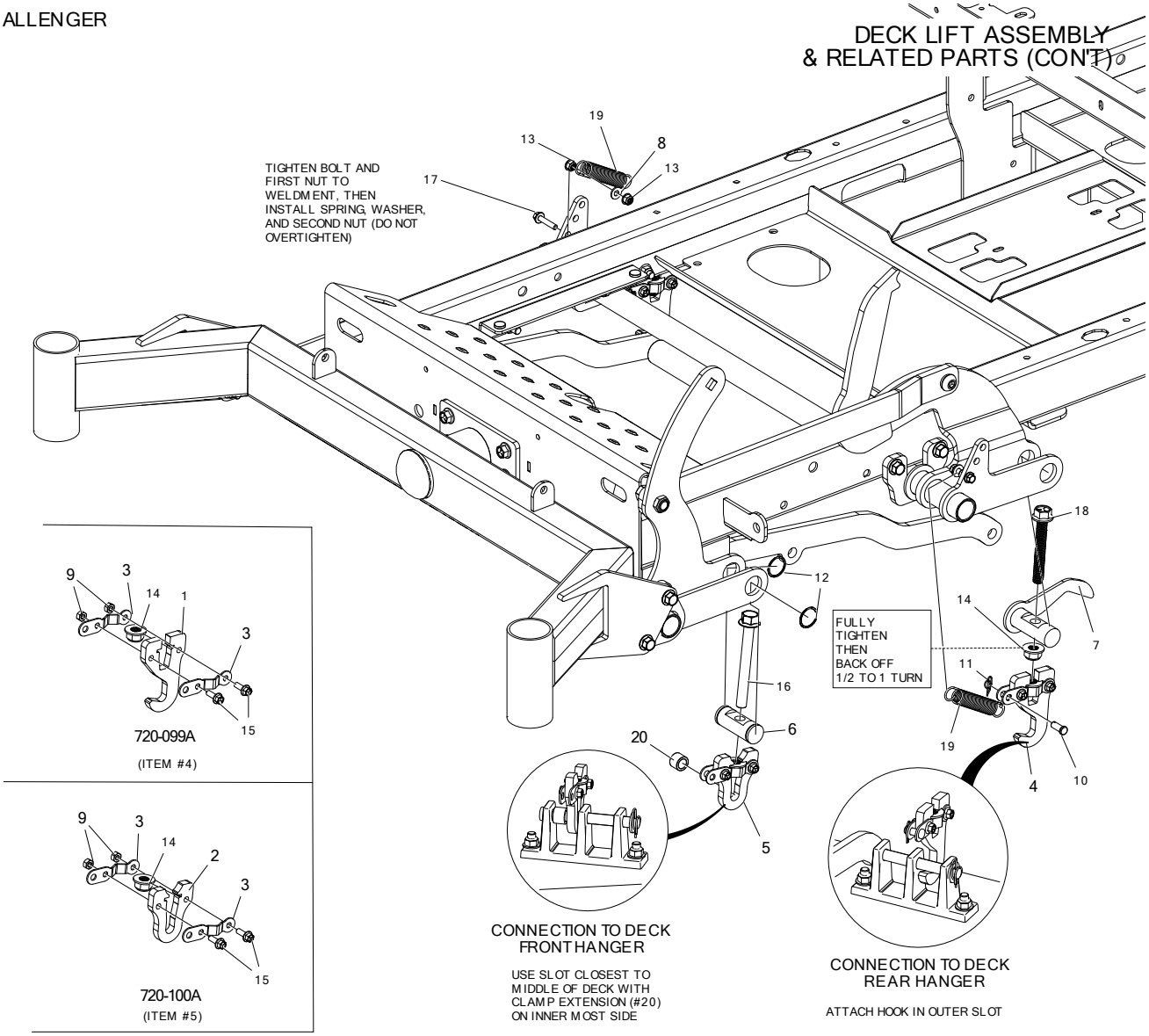


| ITEM # | QTY | PART # | DESCRIPTION |
|---|---|---|---|
| 1 | 2 | 720-096P | DECK HANGER, REAR |
| 2 | 2 | 720-097P | DECK HANGER, FRONT |
| 3 | 8 | 720-098P | NUT RETAINER |
| 4 | 2 | 720-099A | ASS'Y, DECK HANGER, REAR |
| 5 | 2 | 720-100A | ASS'Y, DECK HANGER, FRONT |
| 6 | 2 | 724-052P | HANGER PIN, FRONT |
| 7 | 1 | 724-091W | HANGER PIN WLDT, REAR LH |
| - | 1 | 724-092W | HANGER PIN WLDT, REAR RH |
| 8 | 2 | F-2097 | WASHER, FENDER, 1/4" X 7/8" |
| 9 | 8 | F-1158 | NUT, CENTERLOCK, 1/4-20, YZ, GR5 |
| 10 | 2 | F-1443 | CLEVIS PIN, 5/16 X 7/8" |
| 11 | 2 | F-1492 | RUE RING, 5/16 |
| 12 | 4 | F-1998 | SPIROL RING 1" |
| 13 | 4 | F-2132 | NUT, 1/4-20 NYLOC, FLANGED, YZ |
| 14 | 6 | F-2152 | NUT, 1/2-13 NYLOC, FLANGED, YZ |
| 15 | 8 | F-2162 | FHCS, 1/4-20 X 3/4", YZ, GR5 |
| 16 | 2 | F-2181 | FHCS, 1/2-13 X 4.50, YZ, GR8 |
| 17 | 2 | F-2182 | FHCS, 1/4-20 X 1-1/4", YZ, GR5 |
| 18 | 2 | F-2277 | FHCS 1/2-13 X 3-1/2, GR5, YZ, FULL THREAD |
| 19 | 2 | H-1635 | SPRING, EXT, 3/4" OD X 4" OAL |
| 20 | 2 | 720-010P | CLAMP EXTENSION |

# CUT HEIGHT ASSEMBLY & RELATED PARTS

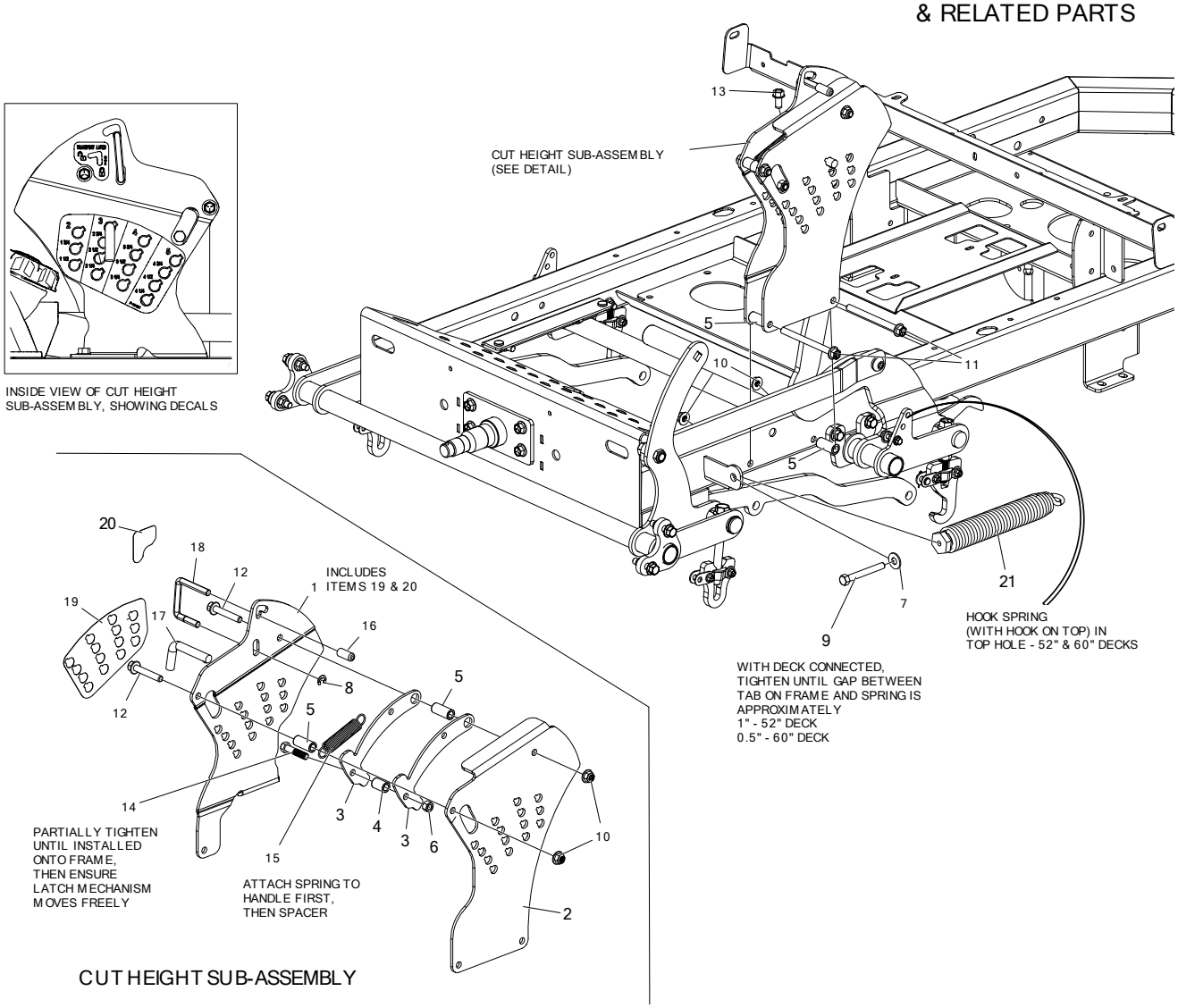


| ITEM # | QTY | PART # | DESCRIPTION |
|---|---|---|---|
| 1 | 1 | 720-134A | PLATE, CUT HEIGHT - INNER W/ DECALS |
| 2 | 1 | 720-105P | PLATE, CUT HEIGHT - OUTER |
| 3 | 2 | 724-042P | CATCH PLATE |
| 4 | 1 | 724-079P | SPACER, CATCH PLATE |
| 5 | 4 | 724-080P | SPACER, CUT HEIGHT PLATE |
| 6 | 1 | F-1005-03 | NUT, 3/8-16, CENTERLOCK, YZ, GR5 |
| 7 | 1 | F-1009-03 | WASHER, FLAT, 3/8, YZ |
| 8 | 1 | F-1080 | SNAP RING TRUARC #5144-37 3/8 HEAVY E-RING |
| 9 | 1 | F-1329 | SCREW,3/8-16 X 3 GR5 FULL THREADED, PLATED |
| 10 | 4 | F-2151 | NUT, 3/8-16 NYLOC, FLANGED, YZ |
| 11 | 2 | F-2160 | FHCS, 3/8-16 X 4-1/2", YZ, GR5 |
| 12 | 2 | F-2218 | FHCS, 3/8-16 X 2-1/4", YZ, GR5 |
| 13 | 1 | F-2219 | HFCS, 3/8-16 X 3/4", CZ, THD FORMING |
| 14 | 1 | F-2260 | HHCS, 3/8-16 X 1-3/4, YZ, GR8 |
| 15 | 1 | H-1635 | SPRING, EXT, 3/4" OD X 4" OAL |
| 16 | 1 | H-2327 | 3/8 DIA X 1"LONG END CAP |
| 17 | 1 | H-3013 | DECK HEIGHT PIN |
| 18 | 1 | H-3120 | TRANSPORT LATCH RELEASE HANDLE |
| 19 | 1 | P-13421 | DECAL, CUT HEIGHT |
| 20 | 1 | P-13437 | DECAL, TRANSPORT LATCH |
| 21 | 1 | H-3117 | EXTENSION SPRING, 1.585 O.D. x (9.8) LONG, W/THREADED PLUG |

# PIVOTING FRONT AXLE & FLOOR PAN

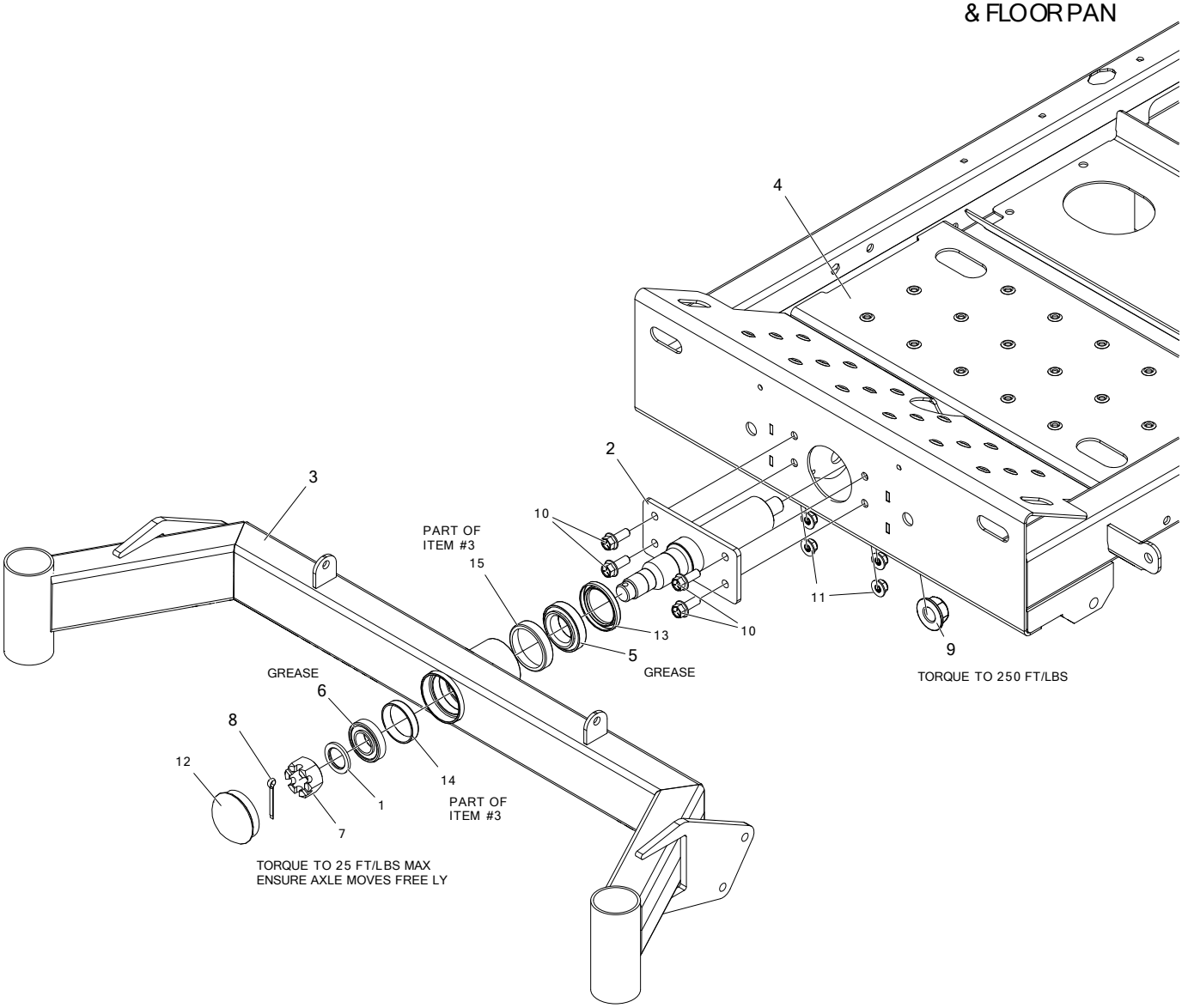


| ITEM # | QTY | PART # | DESCRIPTION |
|---|---|---|---|
| 1 | 1 | 606-303P | WASHER, 10GA GALVANIZED |
| 2 | 1 | 724-056W | WLDT, PIVOT SHAFT |
| 3 | 1 | 721-159W | WLDT, FRONT AXLE, BLACK |
| 4 | 1 | 720-095P | FLOOR PAN |
| 5 | 1 | D-3825-01 | TRB, BEARING CONE |
| 6 | 1 | D-2018-01 | BEARING CONE |
| 7 | 1 | F-1724 | NUT, HEX, SLOTTED, 1-14, YZ |
| 8 | 1 | F-1728 | COTTER PIN, 3/16 X 2", YZ |
| 9 | 1 | F-2078 | NUT, 3/4-16, TOP LOCK, GR-GT, YZ |
| 10 | 4 | F-2141 | FHCS, 3/8-16 X 1", YZ, GR5 |
| 11 | 4 | F-2151 | NUT, 3/8-16 NYLOC, FLANGED, YZ |
| 12 | 1 | H-1924 | GREASE CAP PLATED |
| 13 | 1 | H-2812 | SEAL, SHAFT, 1.75, 2.38, 0.313 |
| 14 | 1 | D-2019-01 | BEARING CUP |
| 15 | 1 | D-3825-02 | BEARING CUP |

# TIRES & FRONT STEP

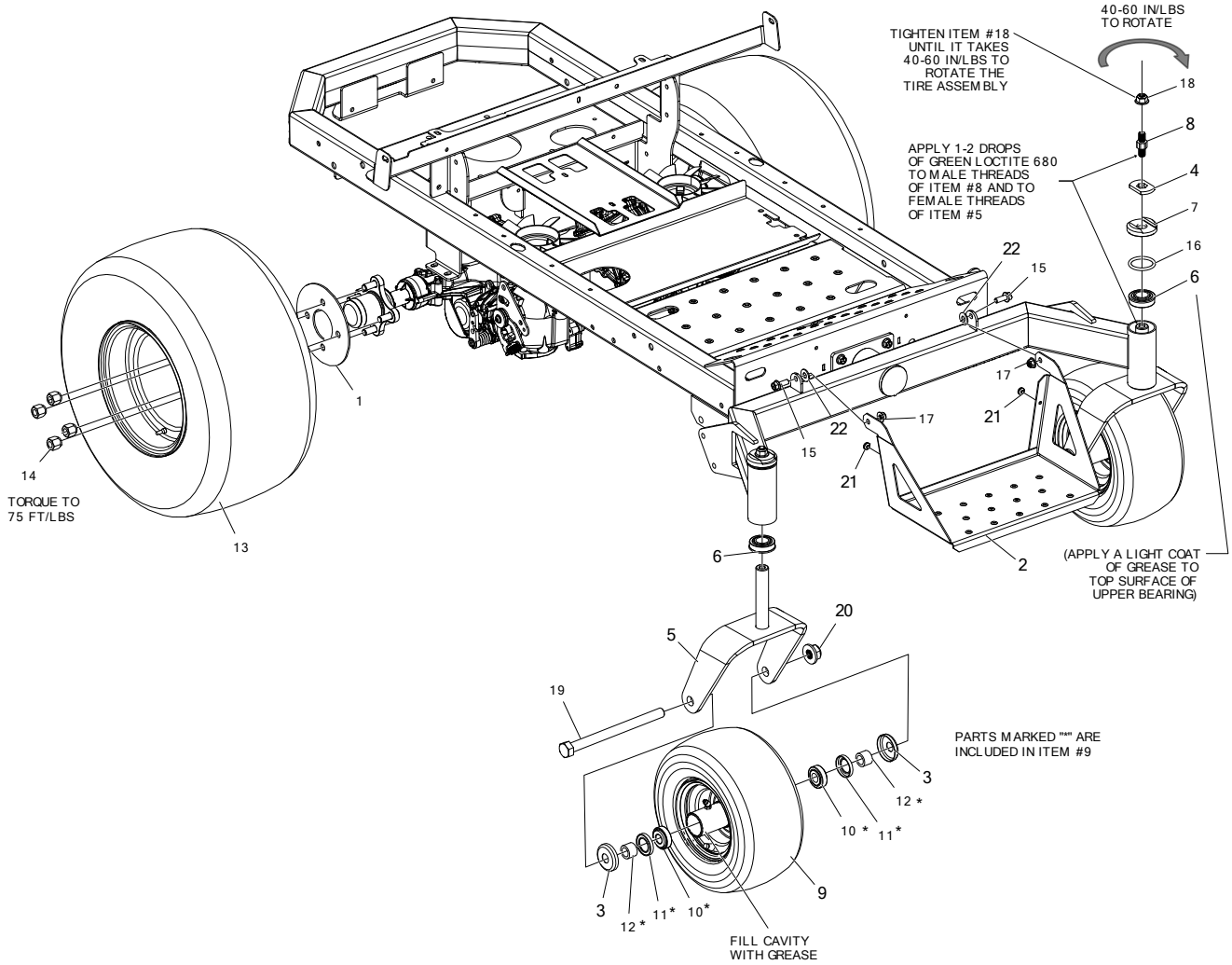


| ITEM # | QTY | PART # | DESCRIPTION |
|---|---|---|---|
| 1 | 2 | 659-092P | WHEEL BACKING PLATE |
| 2 | 1 | 663-134P | STEP, EXTENDED |
| 3 | 4 | 663-221P | CAP, WHEEL BEARING |
| 4 | 2 | 714-589P | CASTER BRAKE DRIVE WASHER |
| 5 | 2 | 721-022W | WLDT, CASTER YOKE |
| 6 | 4 | D-2008-02 | BEARING, SPD, SF-16-32 |
| 7 | 2 | H-3267 | CASTER BRAKE CAP |
| 8 | 2 | H-3268 | CASTER BRAKE, ADJUSTER STUD |
| 9 | 5 | D-4021 | TIRE ASS'Y, FLAT BLACK, SMOOTH, 13 X 6.5-6 |
| 10 | 2 | D-4021-4 | TAPER ROLLER BEARING, LM11949/11910 |
| 11 | 2 | D-4021-5 | GREASE SEAL, S17828001 |
| 12 | 2 | D-4021-6 | SPACER, SPCR005 |
| 13 | 2 | D-4033 | TIRE ASS'Y, 22 X 11-10, TURF, FLAT BLACK |
| 14 | 8 | F-1499 | LUG NUT, 1/2-20, YZ |
| 15 | 2 | F-2141 | FHCS, 3/8-16 X 1", YZ, GR5 |
| 16 | 2 | D-4217 | CASTER BRAKE, O-RING |
| 17 | 2 | F-2151 | NUT, 3/8-16 NYLOC, FLANGED, YZ |
| 18 | 2 | F-2152 | NUT, 1/2-13 NYLOC, FLANGED |
| 19 | 2 | F-2194 | HHCS, 3/4-10 X 9-1/2", YZ, GR5 |
| 20 | 2 | F-2195 | NUT, FLANGE NYLOC, YZ |
| 21 | 2 | H-2461 | RUBBER BUMPER |
| 22 | 2 | F-1009-03 | WASHER, FLAT, 3/8", YZ |

# FRONT PANEL & RELATED PARTS

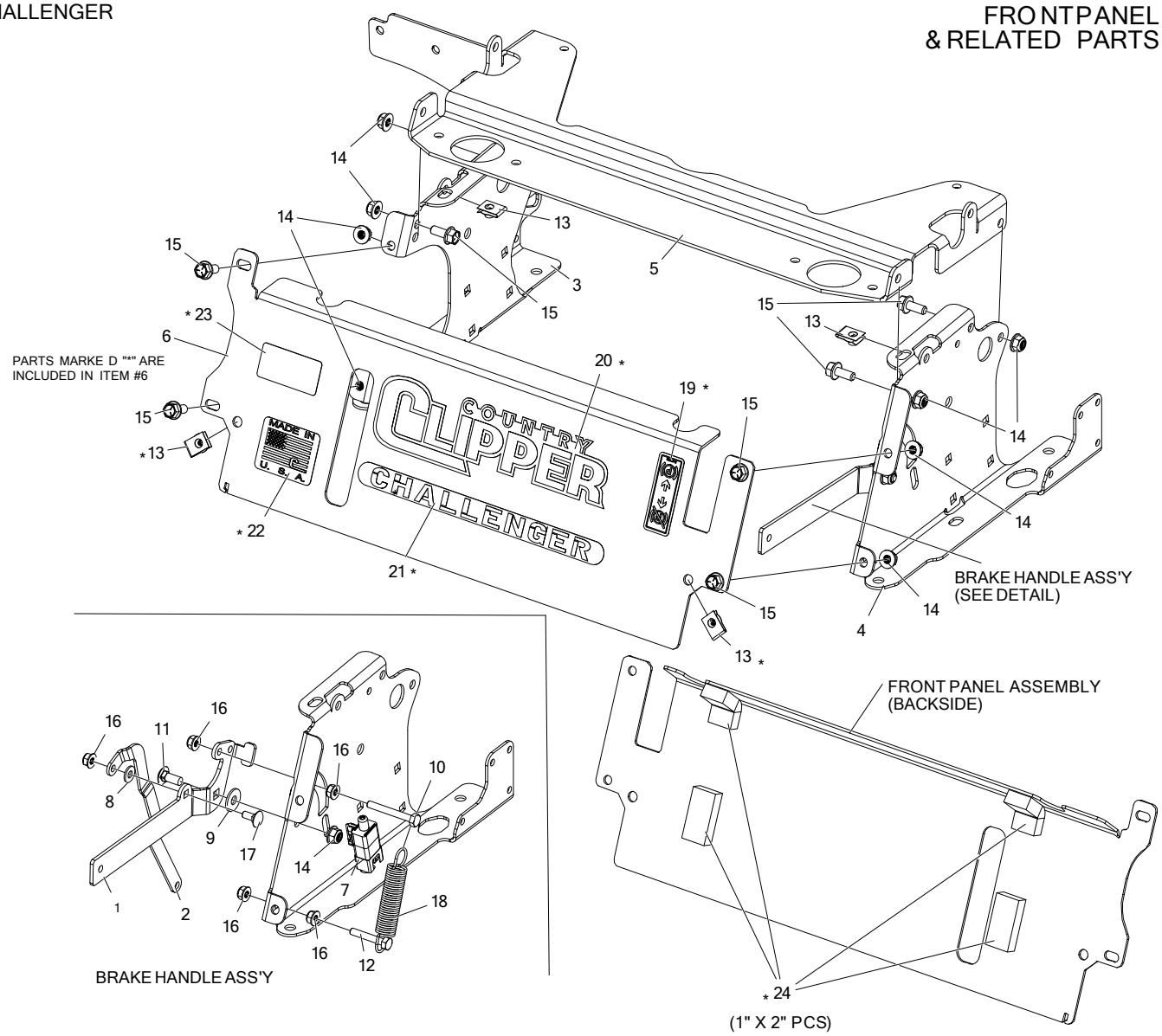


| ITEM # | QTY | PART # | DESCRIPTION |
|---|---|---|---|
| 1 | 1 | 714-503P | BRAKE HANDLE, OFFSET |
| 2 | 1 | 714-512P | BRAKE LINK |
| 3 | 1 | 714-532P | SIDE PANEL, RH |
| 4 | 1 | 714-538P | SIDE PANEL, LH |
| 5 | 1 | 721-158P | ISOLATOR MOUNT SUPPORT |
| 6 | 1 | 721-162A | FRONT PANEL W/DECALS, (CHALL) |
| 7 | 1 | E-6872 | PLUNGER SWITCH, RAIL MOUNT (NO/NO) |
| 8 | 1 | F-1009-01 | FLAT WASHER, 1/4", YZ |
| 9 | 1 | F-1009-02 | WASHER, FLAT, 5/16 |
| 10 | 1 | F-1015-09 | HHCS, 1/4-20 X 2", YZ, GR5 |
| 11 | 1 | F-1671 | CARRIAGE BOLT,5/16-18 X 3/4", YZ, GR5 |
| 12 | 1 | F-1716 | CAPSCREW, 1/4-20 X 1-1/2, GR5, YZ |

| ITEM # | QTY | PART # | DESCRIPTION |
|---|---|---|---|
| 13 | 4 | F-1858 | U-NUT, 1/4-20 |
| 14 | 9 | F-2063 | NUT, 5/16-18, NYLOC, FLANGED, YZ |
| 15 | 8 | F-2120 | FHCS, 5/16-18 X 3/4", YZ, GR5 |
| 16 | 5 | F-2132 | NUT, 1/4-20 NYLOC, FLANGED, YZ |
| 17 | 1 | F-2155 | BOLT, CARRIAGE, 1/4-20 X 5/8", YZ, GR5 |
| 18 | 1 | H-1635 | SPRING, EXT, 3/4" OD X 4" OAL |
| 19 | 1 | P-11382 | DECAL, PARK BRAKE |
| 20 | 1 | P-13312 | DECAL, LOGO, CHROME w/BLK, LG |
| 21 | 1 | P-13316 | DECAL, CHALLENGER |
| 22 | 1 | P-13000 | DECAL, MADE IN USA |
| 23 | 1 | P-13748 | DECAL, FUEL SAFETY |
| 24 | 4 | H-2990 | NEOPRENE FOAM (ADHESIVE) 1/2" |

# FRONT PANEL ASS'Y & RELATED PARTS (CON'T)

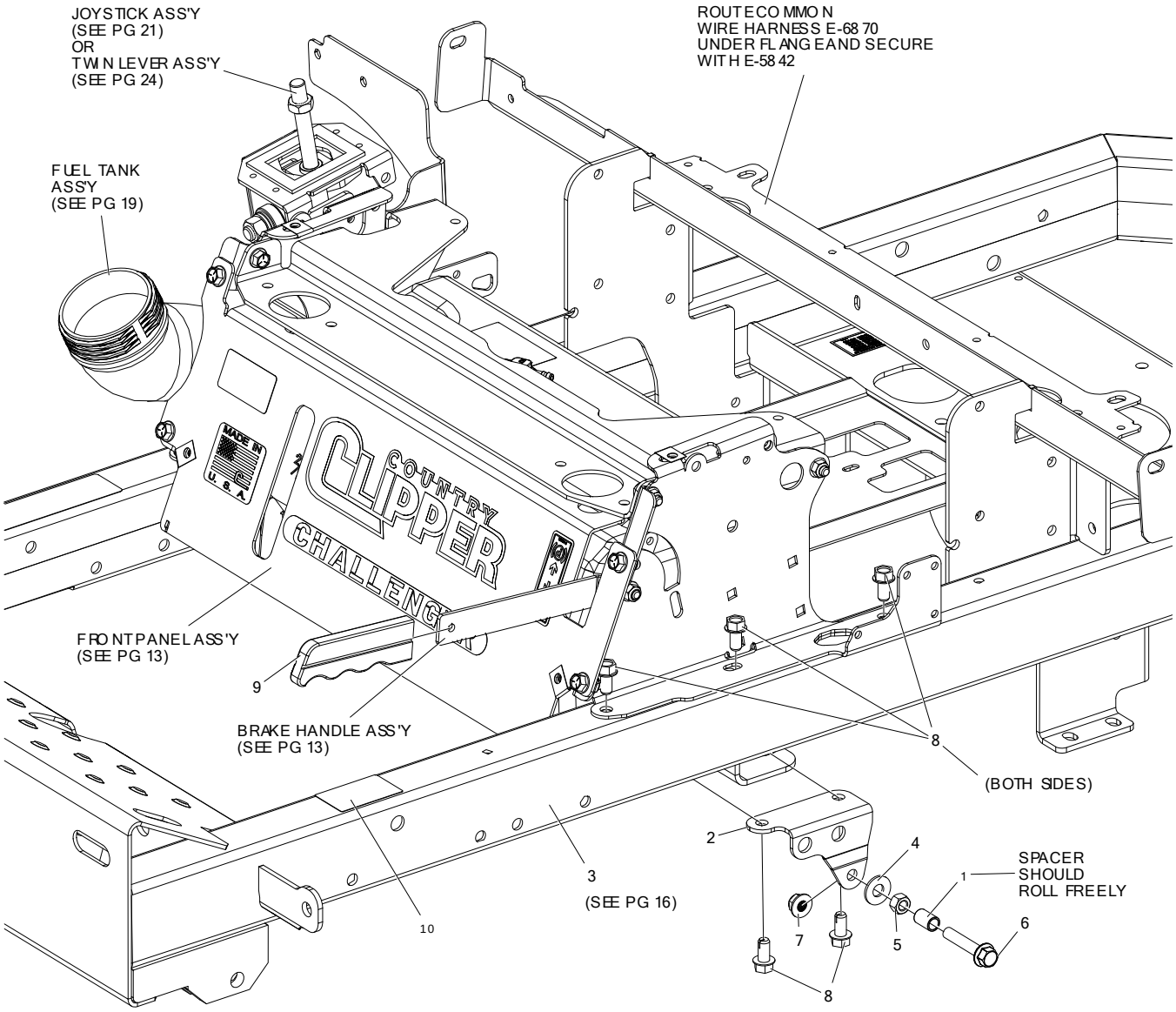


| ITEM # | QTY | PART # | DESCRIPTION |
|---|---|---|---|
| 1 | 2 | 707-073P | STAND-OFF, LINKAGE MOUNT |
| 2 | 1 | 714-473P | BRACKET, DECK FLIP & BRAKE, ROD HANGER, LH |
| - | 1 | 714-501P | BRACKET, DECK FLIP & BRAKE, ROD HANGER, RH |
| 3 | 1 | 720-162A | WLDT, FRAME W/ DECALS |
| 4 | 2 | F-1009-03 | WASHER, FLAT, 3/8, YZ |
| 5 | 2 | F-1011-03 | NUT, HEX, 3/8-16, YZ |
| 6 | 2 | F-2126 | FHCS, 3/8-16 X 2”, YZ, GR5 |
| 7 | 2 | F-2151 | NUT, 3/8-16 NYLOC, FLANGED, YZ |
| 8 | 10 | F-2219 | HFCS, 3/8-16 X 3/4", CZ, THD FORMING |
| 9 | 1 | H-1926 | 1/4" X 1" HANDLE GRIP |
| 10 | 1 | P-13830 | DECAL, QR CODE, STAND-UP DECK |

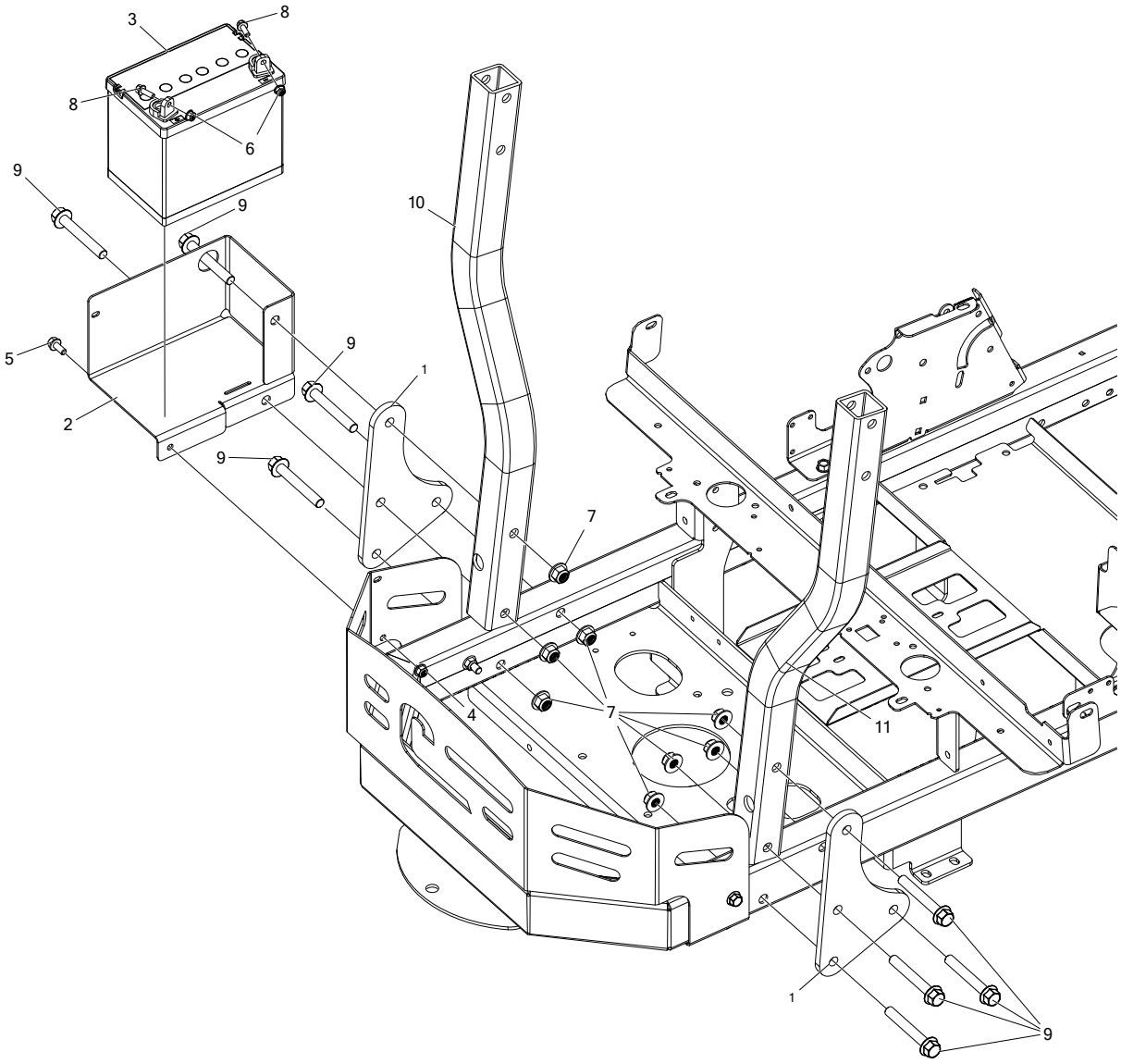


| ITEM # | QTY | PART # | DESCRIPTION |
|---|---|---|---|
| 1 | 2 | 721-142P | MOUNT PLATE - ROPS |
| 2 | 1 | 721-143P | BATTERY BOX |
| 3 | 1 | E-6659 | BATTERY, YPS 35 |
| 4 | 1 | F-2063 | NUT, 5/16-18, NYLOC, FLANGED, YZ |
| 5 | 1 | F-2120 | FHCS, 5/16-18 X 3/4", YZ, GR5 |
| 6 | 2 | F-2132 | NUT, 1/4-20 NYLOC, FLANGED, YZ |
| 7 | 8 | F-2152 | NUT, 1/2-13 NYLOC, FLANGED, YZ |
| 8 | 2 | F-2162 | FHCS, 1/4-20 X 3/4", YZ, GR5 |
| 9 | 8 | F-2163 | FHCS, 1/2-13 X 3-1/2", YZ, GR5 |
| 10 | 1 | H-3222 | TUBE, POST - ROPS |
| 11 | 1 | 721-157A | TUBE, POST - ROPS, W/ DECAL |

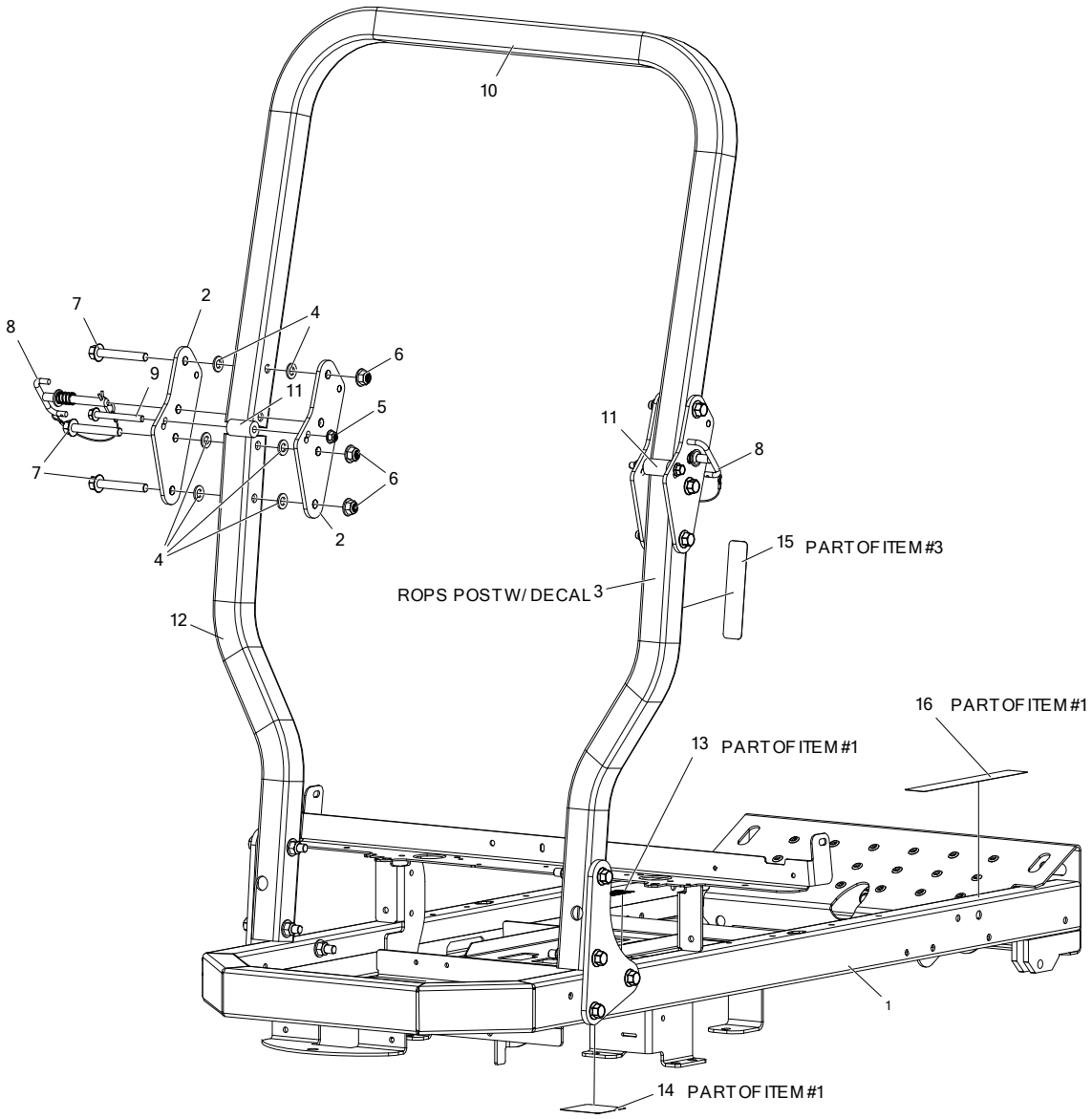


| ITEM # | QTY | PART # | DESCRIPTION |
|---|---|---|---|
| 1 | 1 | 720-162A | WLDT, FRAME W/ DECALS |
| 2 | 4 | 724-107P | HINGE PLATE, ROPS |
| 3 | 1 | 721-157A | TUBE, POST - ROPS, W/ DECAL |
| 4 | 12 | F-1521 | WASHER, 1/2" CUSTOM, YZ |
| 5 | 2 | F-2151 | NUT, 3/8-16 NYLOC, FLANGED, YZ |
| 6 | 6 | F-2152 | NUT, 1/2-13 NYLOC, FLANGED, YZ |
| 7 | 6 | F-2163 | FHCS, 1/2-13 X 3-1/2", YZ, GR5 |
| 8 | 2 | F-2208 | PULL-PIN ASSEMBLY, T-HANDLE |
| 9 | 2 | F-2303 | FHCS, 3/8-16 x 3-1/2", YZ, GR5 |
| 10 | 1 | H-3105 | TUBE, TOP LOOP - ROPS |
| 11 | 2 | H-3148 | BUMPER, URETHANE |
| 12 | 1 | H-3222 | TUBE, POST - ROPS |
| 13 | 1 | P-10777 | PATENT DECAL |
| 14 | 1 | P-12918 | DECAL, HYDRO BELT ROUTING |
| 15 | 1 | P-13593 | DECAL, WARNING ROPS |
| 16 | 1 | P-13751 | DECAL, SAFETY |

BRAKE ASSEMBLY

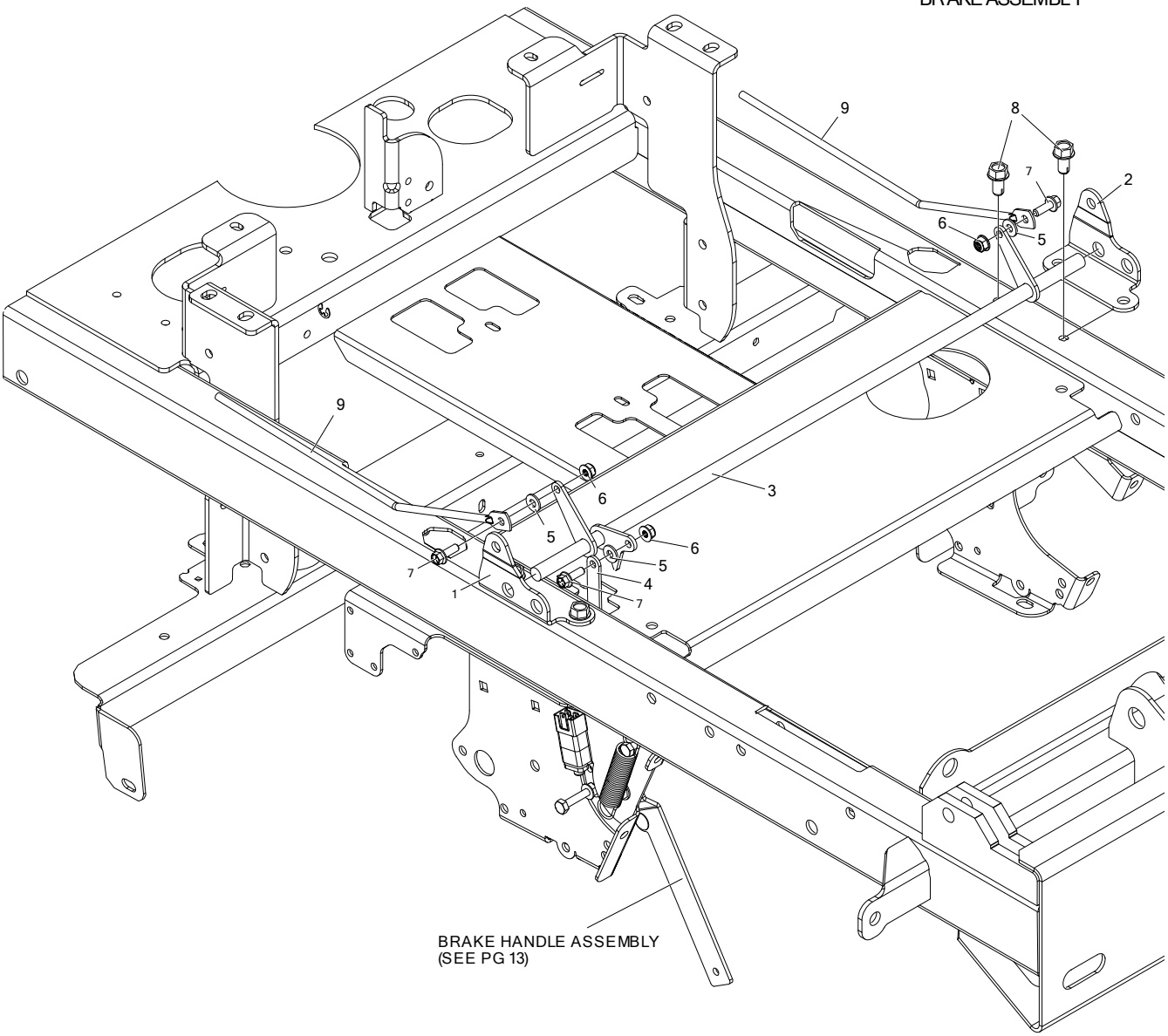


| ITEM # | QTY | PART # | DESCRIPTION |
|---|---|---|---|
| 1 | 1 | 714-473P | BRACKET, DECK FLIP & BRAKE ROD HANGER, LH |
| 2 | 1 | 714-501P | BRACKET, DECK FLIP & BRAKE ROD HANGER, RH |
| 3 | 1 | 714-511W | WLDT, BRAKE ROD |
| 4 | 1 | 714-512P | BRAKE LINK |
| 5 | 3 | F-1009-01 | FLAT WASHER, 1/4", YZ |
| 6 | 3 | F-2132 | NUT, 1/4-20 NYLOC, FLANGED, YZ |
| 7 | 3 | F-2162 | FHCS, 1/4-20 X 3/4", YZ, GR5 |
| 8 | 4 | F-2219 | HFCS, 3/8-16 X 3/4", CZ, THD FORMING |
| 9 | 2 | H-3250 | BRAKE LINK ROD |

BRAKE ASSEMBLY
(CON'T)

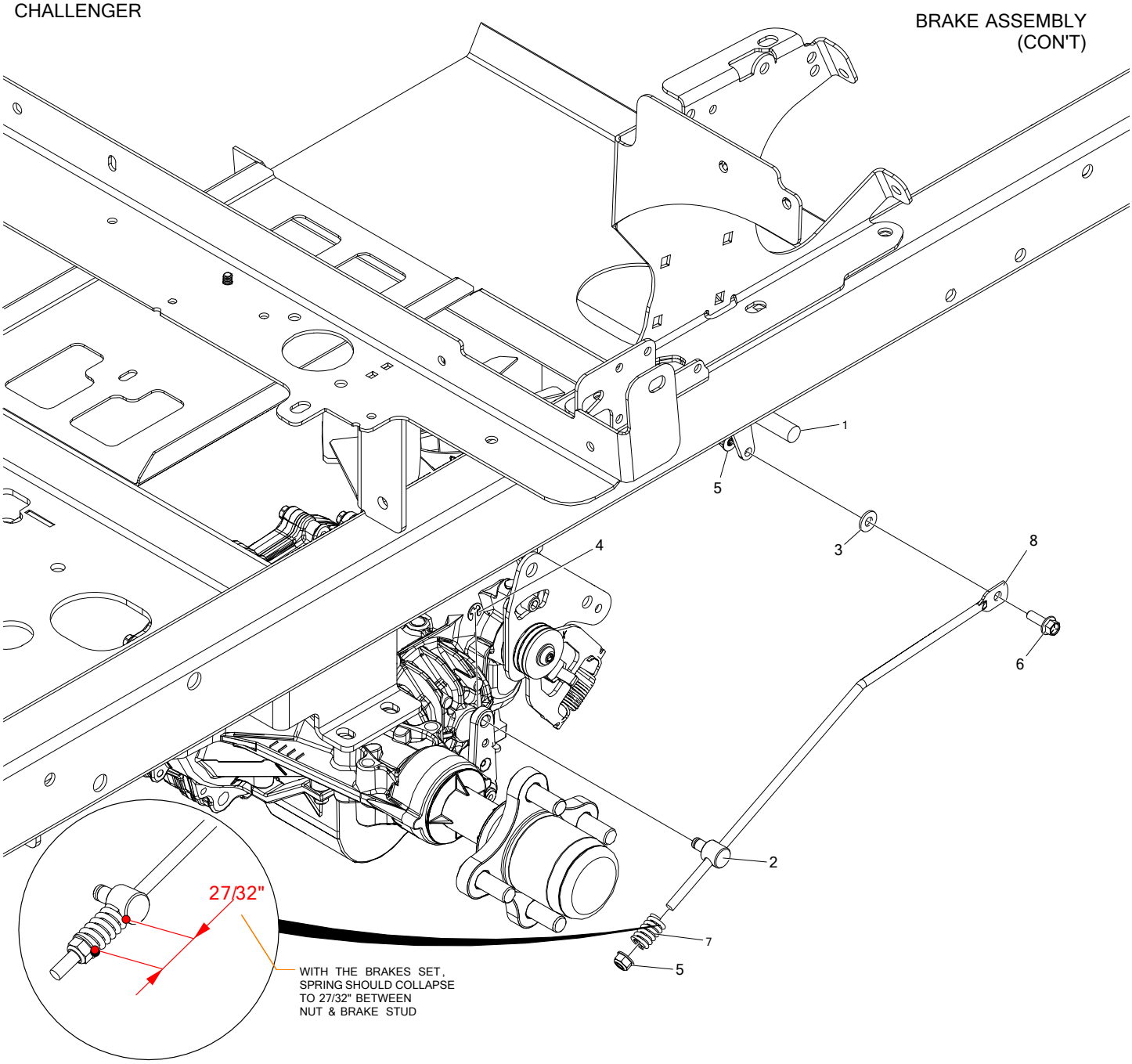


| ITEM # | QTY | PART # | DESCRIPTION |
|---|---|---|---|
| 1 | 1 | 714-511W | WLDT, BRAKE ROD |
| 2 | 2 | 714-522P | BRAKE STUD |
| 3 | 2 | F-1009-01 | FLAT WASHER, 1/4", YZ |
| 4 | 2 | F-1610 | RETAINING RING, EXTERNAL |
| 5 | 2 | F-2132 | NUT, 1/4-20 NYLOC, FLANGED, YZ |
| 6 | 2 | F-2162 | FHCS, 1/4-20 X 3/4", YZ, GR5 |
| 7 | 2 | H-2786 | SPRING, COMP, 0.562 X 0.88 HGT |
| 8 | 2 | H-3250 | BRAKE LINK ROD |

# FUEL TANK ASSEMBLY & BATTERY HOLD DOWN

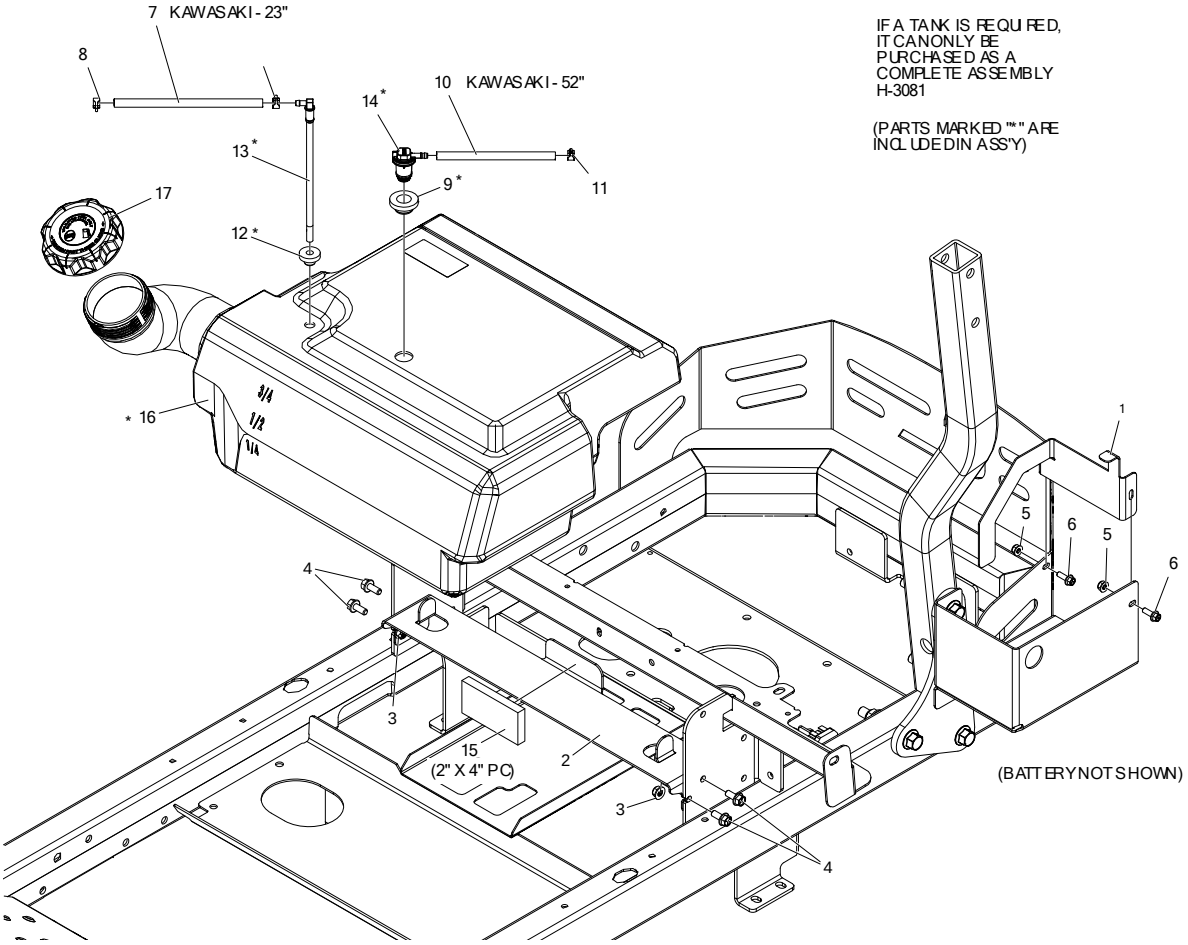


| ITEM # | QTY | PART # | DESCRIPTION |
|---|---|---|---|
| 1 | 1 | 721-144P | CLAMP PLATE, BATTERY BOX |
| 2 | 1 | 721-171P | TANK SUPPORT |
| 3 | 4 | F-2063 | NUT, 5/16-18, NYLOC, FLANGED |
| 4 | 4 | F-2120 | FHCS, 5/16-18 X .75, YZ, GR5 |
| 5 | 2 | F-2132 | NUT, FLANGED, 1/4-20, W/NYLOC, GR5 |
| 6 | 2 | F-2162 | FHCS, 1/4-20 X 3/4", GR5, YZ |
| 7 | 1 | H-1648 | FUEL LINE, 1/2" O.D., 1/4" I.D. |
| 8 | 2 | H-1687 | 1/2 O.D. HOSE SPRING CLAMP |
| 9 | 1 | H-2679 | REMOTE VENT GROMMET |
| 10 | 1 | H-2697 | HOSE, FUEL LINE .188 ID X .406 OD |
| 11 | 1 | H-2698 | CLAMP, .406 OD FUEL LINE |
| 12 | 1 | H-2741 | GROMMET, PICK UP TUBE |
| 13 | 1 | H-2742 | PICK UP TUBE |
| 14 | 1 | H-2831 | REMOTE VENT |
| 15 | 1 | H-2990 | WEATHER-RESISTANT NEOPRENE FOAM (ADHESIVE) 1/2" |
| 16 | 1 | H-3081 | FUEL TANK |
| 17 | 1 | H-3236 | RATCHET CAP, W/ SS TETHER, 3.5 DIA |

# JOYSTICK CONTROL & RELATED PARTS

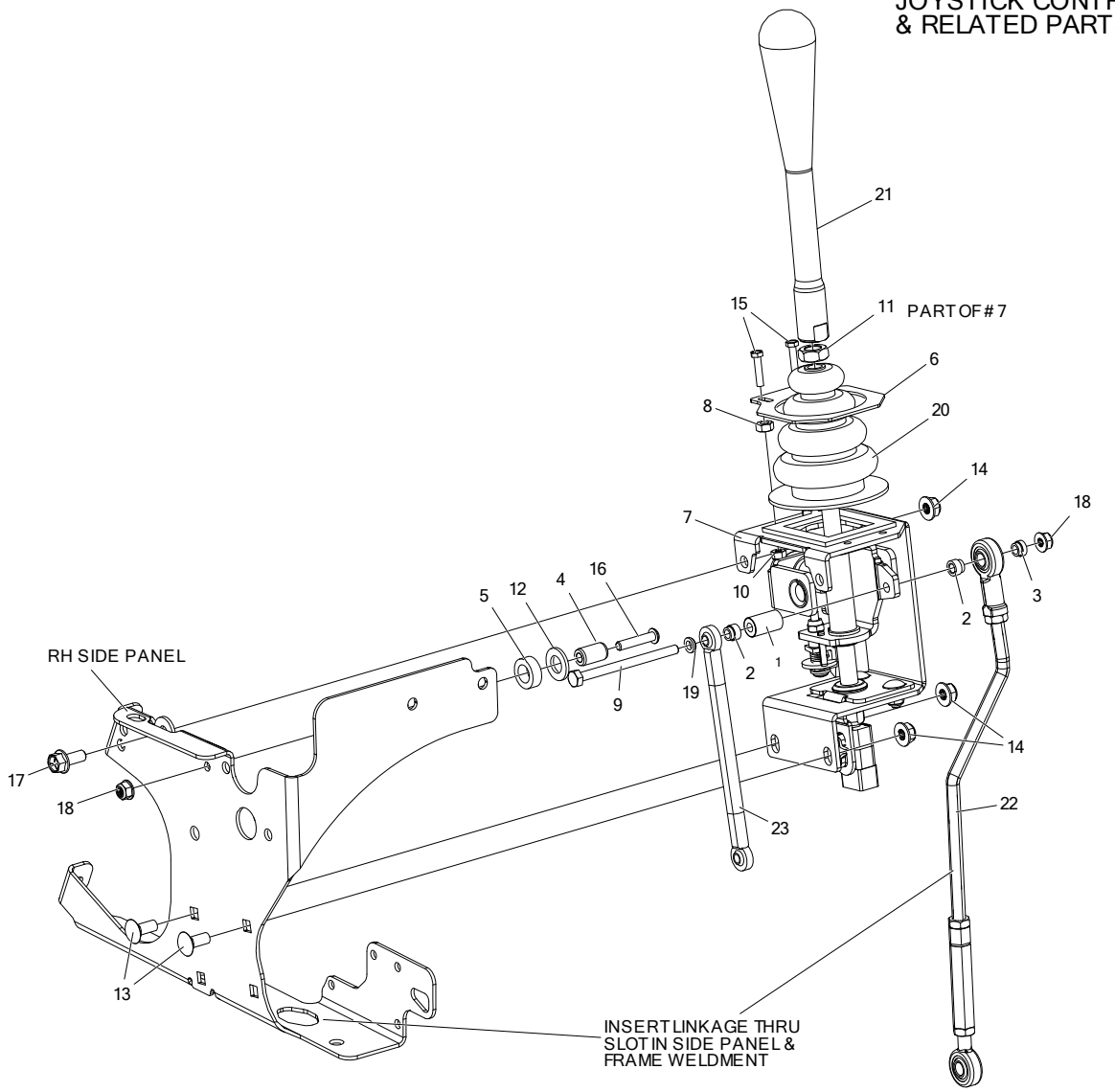


| ITEM # | QTY | PART # | DESCRIPTION |
|---|---|---|---|
| 1 | 1 | 625-100P | TUBE, PIVOT, JOYSTICK |
| 2 | 2 | 625-107P | BUSHING, .375 ROD END |
| 3 | 1 | 625-116P | BUSHING, .375 ROD END, SHORT |
| 4 | 1 | 714-544P | PIVOT PIN |
| 5 | 1 | 625-126P | SPACER, JOYSTICK PANEL |
| 6 | 1 | 720-038P | PLT, BOOT RETAINER |
| 7 | 1 | 720-161A | JOYSTICK ASSEMBLY (AMBIDEXTROUS) |
| 8 | 2 | F-1011-01 | NUT,HEX, 1/4-20 UNC-2B YELLOW PLATED |
| 9 | 1 | F-1020-01 | CAPSCREW, 1/4-20 X 3-1/2", YZ, GR5 |
| 10 | 2 | F-1448 | LOCKNUT, 10-32 NYLOC YELLOW PLTD |
| 11 | 1 | F-1462 | JAM NUT, 1/2-20, RH, YZ |
| 12 | 1 | F-1521 | WASHER, 1/2" CUSTOM, YZ |
| 13 | 2 | F-1671 | CARRIAGE BOLT, 5/16-18 X 3/4 GR5, YZ |
| 14 | 3 | F-2063 | NUT, 5/16-18, NYLOC, FLANGED, YZ |
| 15 | 2 | F-2100 | HHMS, 10-32 X 7/8", CZ |
| 16 | 1 | F-2103 | SHCS, BUTTON HD, 1/4-20 X 1", CZ |
| 17 | 1 | F-2120 | FHCS, 5/16-18 X 3/4", YZ, GR5 |
| 18 | 2 | F-2132 | NUT, 1/4-20 NYLOC, FLANGED, YZ |
| 19 | 1 | H-1989 | BALL JOINT BUSHING |
| 20 | 1 | H-1991 | JOY STICK BOOT |
| 21 | 1 | H-2964 | HANDLE, JOYSTICK |
| 22 | 1 | H-3226 | LINKAGE ASSEMBLY, JS & TS, RH |
| 23 | 1 | H-3229 | LINKAGE, INNER, 1/4 X 6.375 |

# JOYSTICK ASSEMBLY
{720-161A}

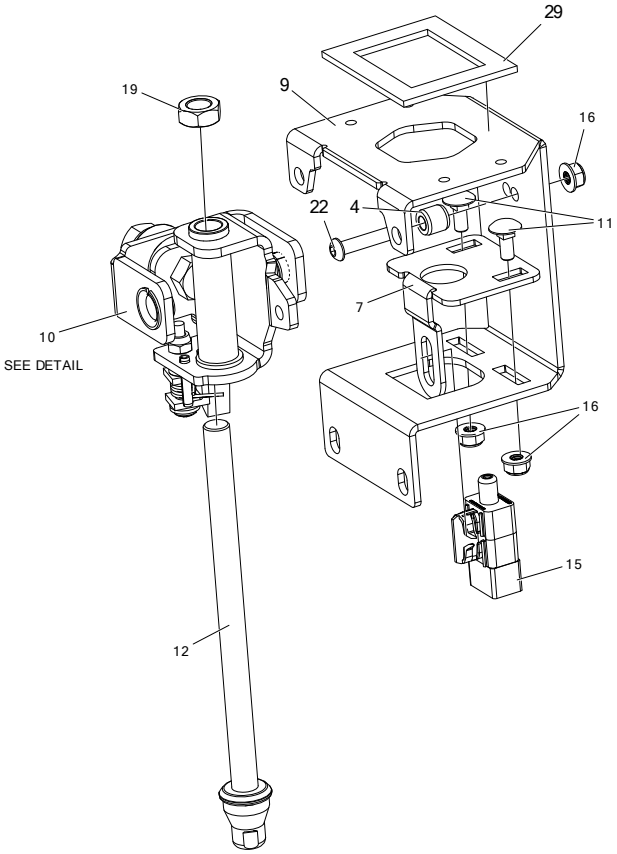


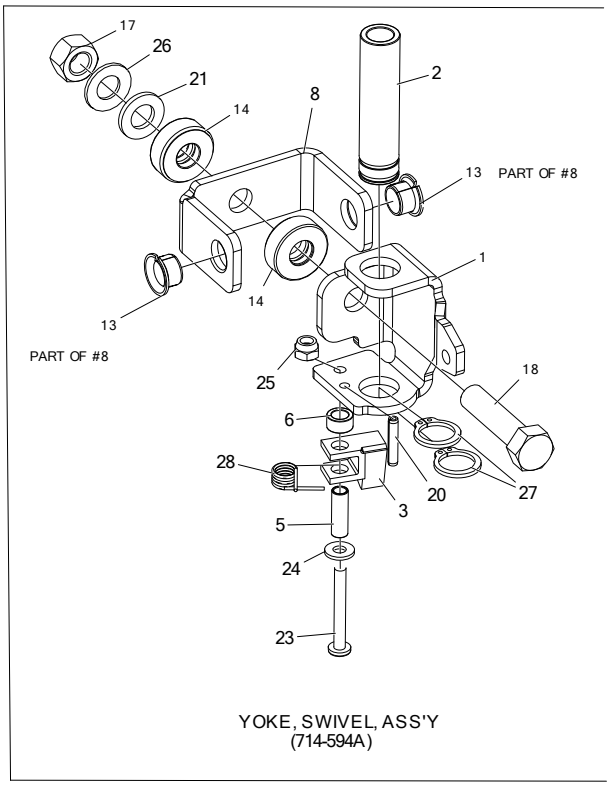


| ITEM # | QTY | PART # | DESCRIPTION |
|---|---|---|---|
| 1 | 1 | 625-096P | YOKE, SWIVEL, JOYSTICK |
| 2 | 1 | 625-099P | TUBE, GUIDE, CONTROL ROD |
| 3 | 1 | 714-593P | TAB, CAM DETENT |
| 4 | 1 | 625-106P | PIN, PIVOT, JS |
| 5 | 1 | 625-124P | TUBE-SPACER, DETENT CAM |
| 6 | 1 | 625-125P | SPACER, CAM DETENT |
| 7 | 1 | 724-114P | JOYSTICK NEUTRAL PLATE |
| 8 | 1 | 625-128A | JOYSTICK ASSEMBLY |
| 9 | 1 | 724-113P | JOYSTICK HOUSING |
| 10 | 1 | 714-594A | YOKE, SWIVEL ASSEMBLY |
| 11 | 2 | F-2155 | BOLT, CARRIAGE, 1/4-20 X 5/8”, YZ, GR5 |
| 12 | 1 | 709-169A | ROD ASSEMBLY, SHORT, 1/2" |
| 13 | 2 | D-3784 | BUSHING, DU 1/2 DIA X 3/8 WIDE |
| 14 | 2 | D-3931 | THRUST BEARING |
| 15 | 1 | E-6692 | PLUNGER SWITCH, RAIL MOUNT |
| 16 | 3 | F-2132 | NUT, FLANGED, 1/4-20 w/NYLOC, YZ |
| 17 | 1 | F-1005-05 | NUT, 1/2-13, CENTERLOCK, YZ, GR5 |
| 18 | 1 | F-1293 | HHCS, 1/2-13 X 2", YZ, GR5 |
| 19 | 1 | F-1462 | JAM NUT, 1/2-20, RH, YZ |
| 20 | 1 | F-1503 | PIN,SPIROL 3/16 DIA X 1 X .010 THK |
| 21 | 1 | F-1521 | WASHER, 1/2" CUSTOM, YZ |
| 22 | 1 | F-2103 | SHCS, BUTTON HD, 1/4-20 X 1", CZ |
| 23 | 1 | F-2135 | SCREW, PANHEAD, PHILLIPS #12-24 X 1.75 CZ |
| 24 | 1 | F-2136 | WASHER, FLAT, #12 PLAIN, CZ |
| 25 | 1 | F-2137 | NUT, #12-24, NYLOCK |
| 26 | 1 | H-2704 | SPRING, BELLEVILLE, .50 X 1 X .073 |
| 27 | 2 | H-2705 | RING, RETAINING, .75 EXT. |
| 28 | 1 | H-2710 | SPRING, DETENT, JOYSTICK |
| 29 | 1 | H-1947 | JOYSTICK GASKET |

# JOYSTICK ASSEMBLY MOUNTING & RELATED PARTS

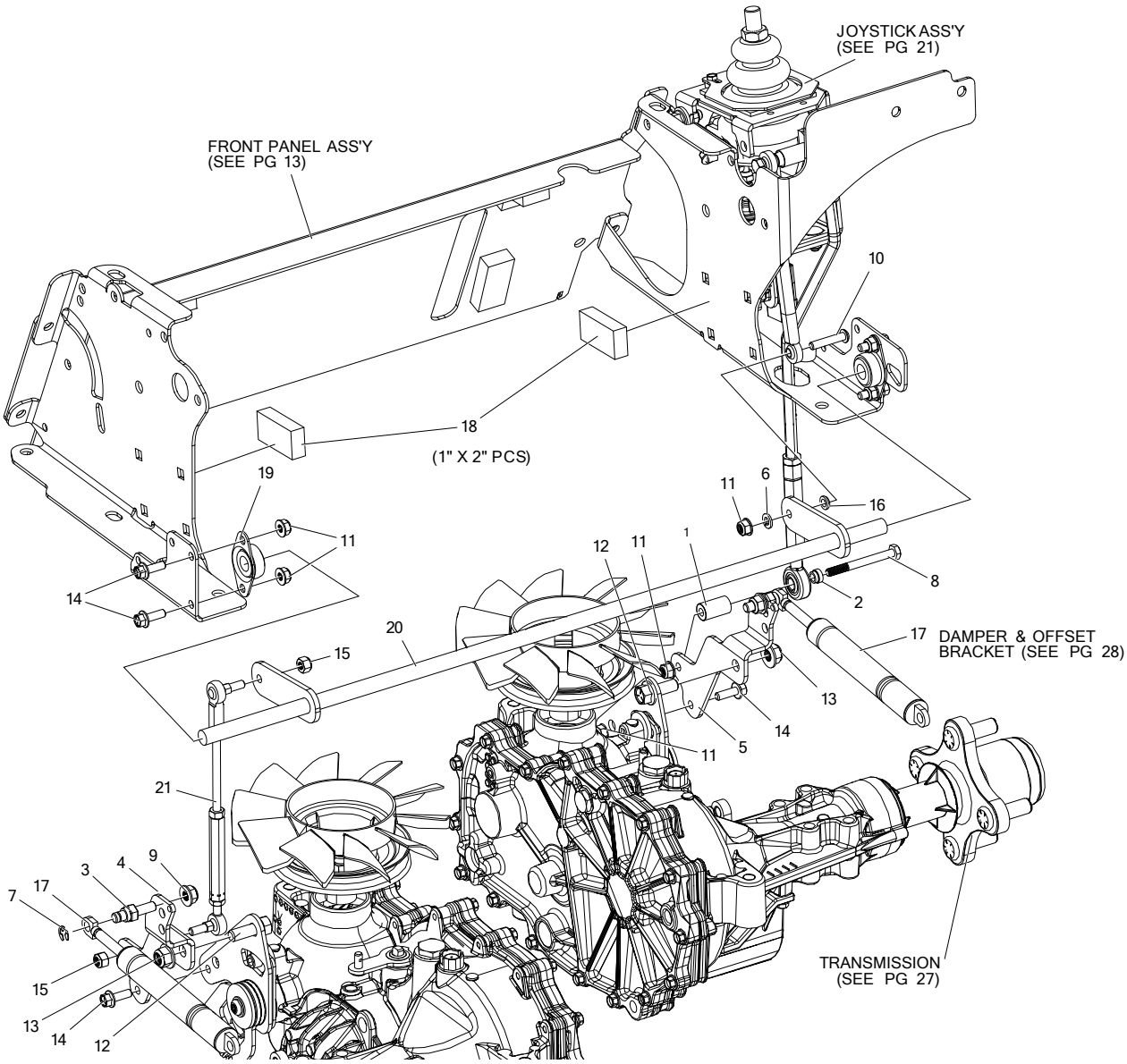


| ITEM # | QTY | PART # | DESCRIPTION |
|---|---|---|---|
| 1 | 1 | 625-100P | TUBE, PIVOT, JOYSTICK |
| 2 | 3 | 625-116P | BUSHING, .375 ROD END, SHORT |
| 3 | 2 | 638-028P | DAMPER BOLT 5/16-18 X 3/4" |
| 4 | 1 | 721-121P | BRACKET, DAMPER OFFSET, LH |
| 5 | 1 | 721-122P | BRACKET, DAMPER OFFSET, RH |
| 6 | 1 | F-1019-01 | WASHER, LOCK, 1/4, YZ |
| 7 | 2 | F-1610 | RETAINING RING, EXTERNAL |
| 8 | 1 | F-1703 | CAPSCREW, HEX HD, 1/4-20 X 2-1/2" |
| 9 | 2 | F-2063 | NUT, 5/16-18, NYLOC, FLANGED, YZ |
| 10 | 1 | F-2103 | SHCS, BUTTON HD, 1/4-20 X 1" |
| 11 | 8 | F-2132 | NUT, 1/4-20 NYLOC, FLANGED, YZ |
| 12 | 2 | F-2141 | FHCS, 3/8-16 X 1", YZ, GR5 |
| 13 | 2 | F-2151 | NUT, 3/8-16 NYLOC, FLANGED, YZ |
| 14 | 6 | F-2162 | FHCS, 1/4-20 X 3/4", YZ, GR5 |
| 15 | 2 | F-2202 | NUT, 1/4-20, NYLOC, YZ |
| 16 | 1 | H-1989 | BALL JOINT BUSHING |
| 17 | 2 | H-2896 | DAMPER |
| 18 | 2 | H-2990 | NEOPRENE FOAM (ADHESIVE) 1/2" |
| 19 | 2 | H-2921 | SIDE FLANGE BRG., 0.500 |
| 20 | 1 | H-3221 | WLDT, CROSS SHAFT, JS |
| 21 | 1 | H-3234 | CONTROL LINKAGE ASSEMBLY |

# TWIN LEVER CONTROL & RELATED PARTS

RIGHT HAND SHOWN
LEFT HAND OPPOSITE

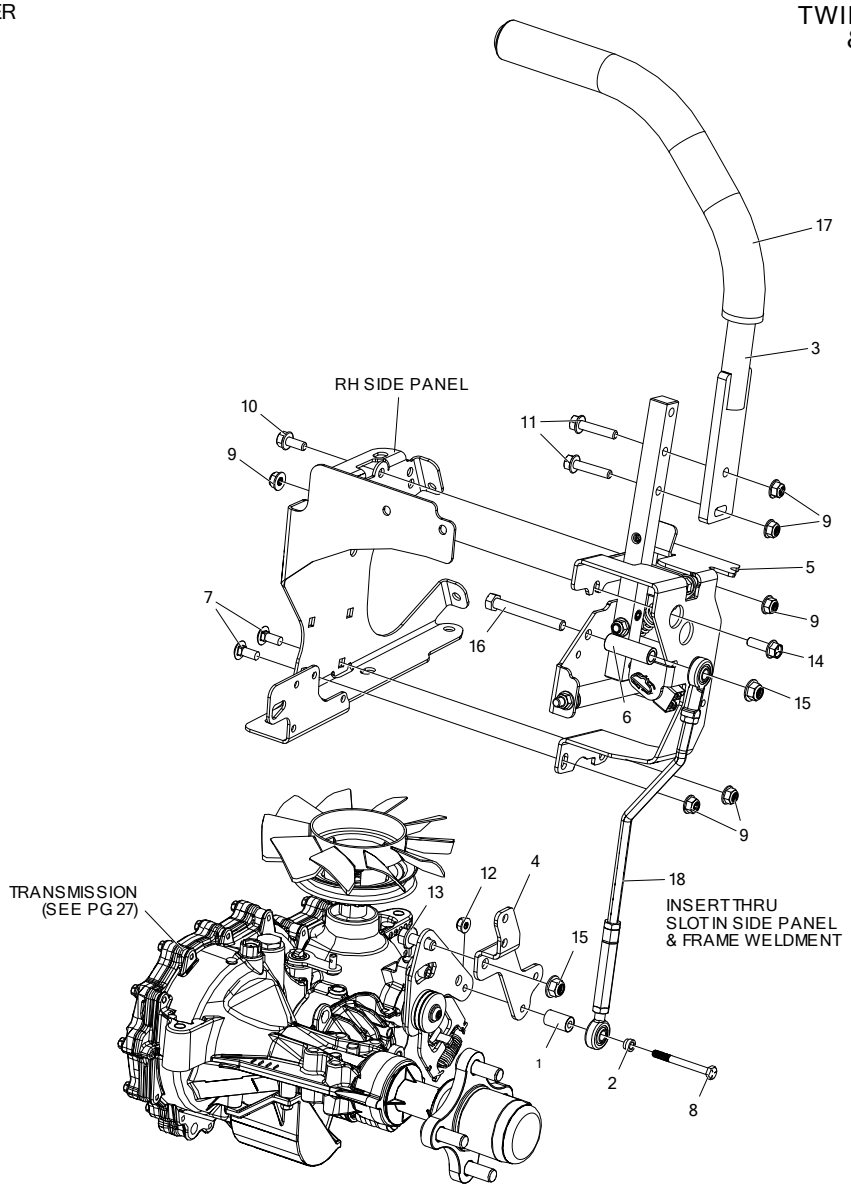


| ITEM # | QTY | PART # | DESCRIPTION |
|---|---|---|---|
| 1 | 1 | 625-100P | TUBE, PIVOT, JOYSTICK |
| 2 | 1 | 625-116P | BUSHING, .375 ROD END, SHORT |
| 3 | 1 | 659-375W | WLDT, DUAL LEVER |
| 4 | 1 | 721-122P | BRACKET, DAMPER OFFSET, RH |
| - | 1 | 721-121P | BRACKET, DAMPER OFFSET, LH |
| 5 | 1 | 721-149A | ASSY, TS CONTROL, RH |
| - | 1 | 721-150A | ASSY, TS CONTROL, LH |
| 6 | 1 | 724-150P | SPACER, TWINSTICK LINKAGE |
| 7 | 2 | F-1671 | CARRIAGE BOLT, 5/16-18 X 3/4, GR5, YZ |
| 8 | 1 | F-1703 | CAPSCREW, 1/4-20 X 2-1/2, GR5, ZC |
| 9 | 6 | F-2063 | NUT, 5/16-18, NYLOC, FLANGED, YZ |
| 10 | 1 | F-2120 | FHCS, 5/16-18 X 3/4", YZ, GR5 |
| 11 | 2 | F-2129 | FHCS, 5/16-18 X 1-1/2", YZ, GR5 |
| 12 | 1 | F-2132 | NUT, 1/4-20 NYLOC, FLANGED, YZ |
| 13 | 1 | F-2141 | FHCS, 3/8-16 X 1", YZ, GR5 |
| 14 | 1 | F-2148 | FHCS, 5/16-18 X 1", GR5, YZ |
| 15 | 2 | F-2151 | NUT, 3/8-16 NYLOC, FLANGED, YZ |
| 16 | 1 | F-1537 | CAPSCREW, 3/8-16 x 3", YZ, GR5 |
| 17 | 1 | H-2739 | GRIP, 15", CLOSED END |
| 18 | 1 | H-3226 | LINKAGE ASSEMBLY, JS & TS, RH |
| - | 1 | H-3227 | LINKAGE ASSEMBLY, JS & TS, LH |

# TWIN LEVER ASSEMBLY
{721-149A - RIGHT SIDE}
{721-150A - LEFT SIDE}

RIGHT HAND SHOWN
LEFT HAND OPPOSITE

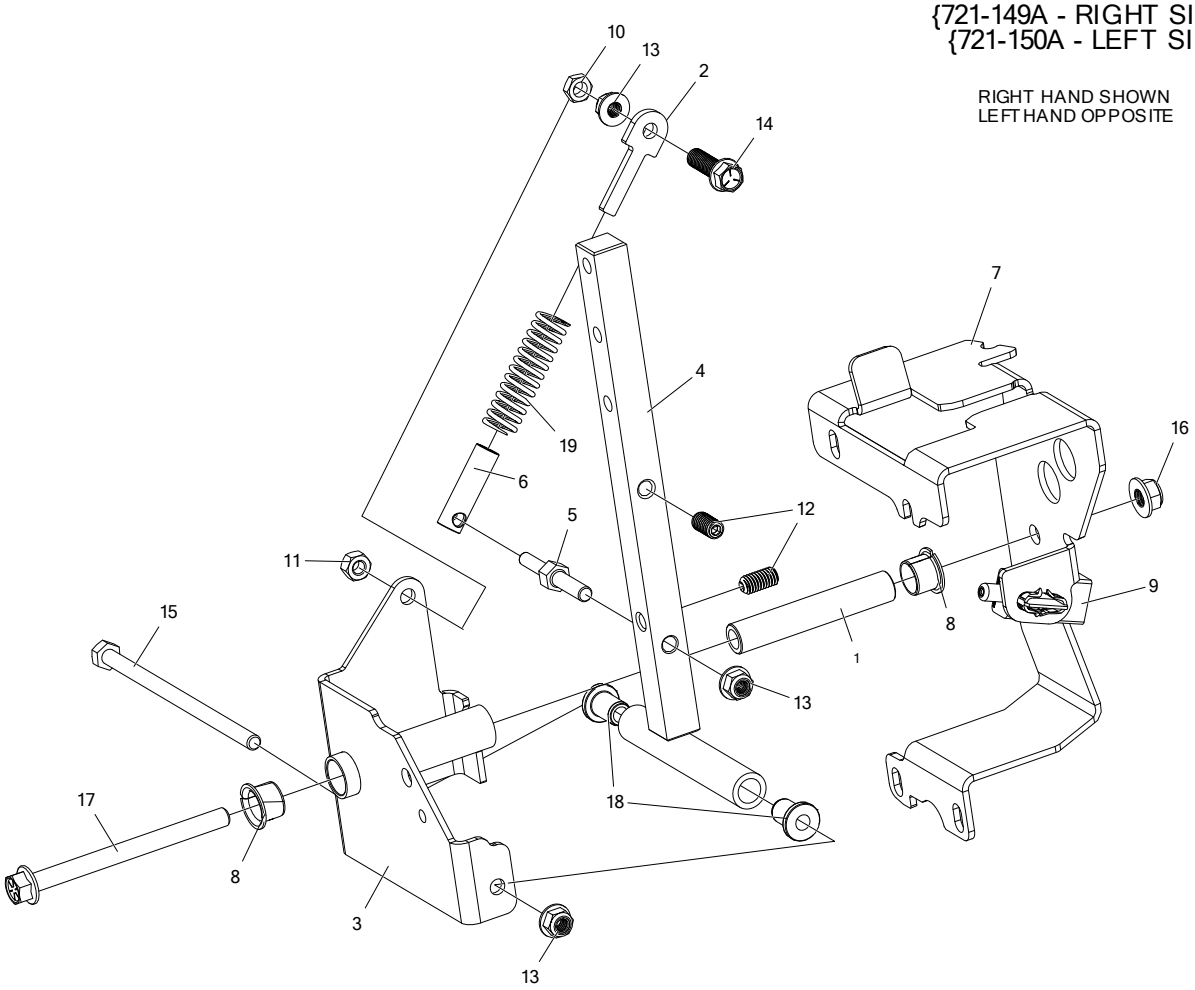


| ITEM # | QTY | PART # | DESCRIPTION |
|---|---|---|---|
| 1 | 1 | 714-074P | PIN, PIVOT, TWIN LEVER |
| 2 | 1 | 721-006P | SPRING GUIDE, TS |
| 3 | 1 | 721-088W | WLDT, TWIN STICK PIVOT, R |
| - | 1 | 721-089W | WLDT, TWIN STICK PIVOT, L |
| 4 | 1 | 721-090W | WLDT, HANDLE BASE |
| 5 | 1 | 721-093P | PIN, SPRING OVER-CENTER |
| 6 | 1 | 721-094P | SPRING GUIDE, TS OVER-CENTER |
| 7 | 1 | 714-539P | HOUSING, TWIN STICK, RH |
| - | 1 | 714-540P | HOUSING, TWIN STICK, LH |
| 8 | 2 | D-3730 | BUSHING, DU 5/8 DIA X 1/2 LG |
| 9 | 1 | E-6692 | PLUNGER SWITCH, RAIL MOUNT |
| 10 | 1 | F-1011-02 | NUT, HEX 5/16-18 |
| 11 | 1 | F-1125 | NUT, CENTERLOCK, 5/16-18, YZ, GR5 |
| 12 | 2 | F-1903 | SETSCREW, 3/8-16 X 3/4" W/ NYLON |
| 13 | 3 | F-2063 | NUT, 5/16-18, NYLOC, FLANGED, YZ |
| 14 | 1 | F-2122 | FHCS, 5/16-18 X 1-1/4", YZ, GR5, FULL THD |
| 15 | 1 | F-2145 | HHCS, 5/16-18 X 6", YZ, GR8 |
| 16 | 1 | F-2151 | NUT, 3/8-16 NYLOC, FLANGED, YZ |
| 17 | 1 | F-2160 | FHCS, 3/8-16 X 4-1/2", YZ, GR5 |
| 18 | 2 | H-3009 | BUSHING, 0.313, NYLON, FLANGED |
| 19 | 1 | H-3079 | SPRING, TS OVER CENTER |

# CONTROL PANEL ASSEMBLY

714-533A (KAW)

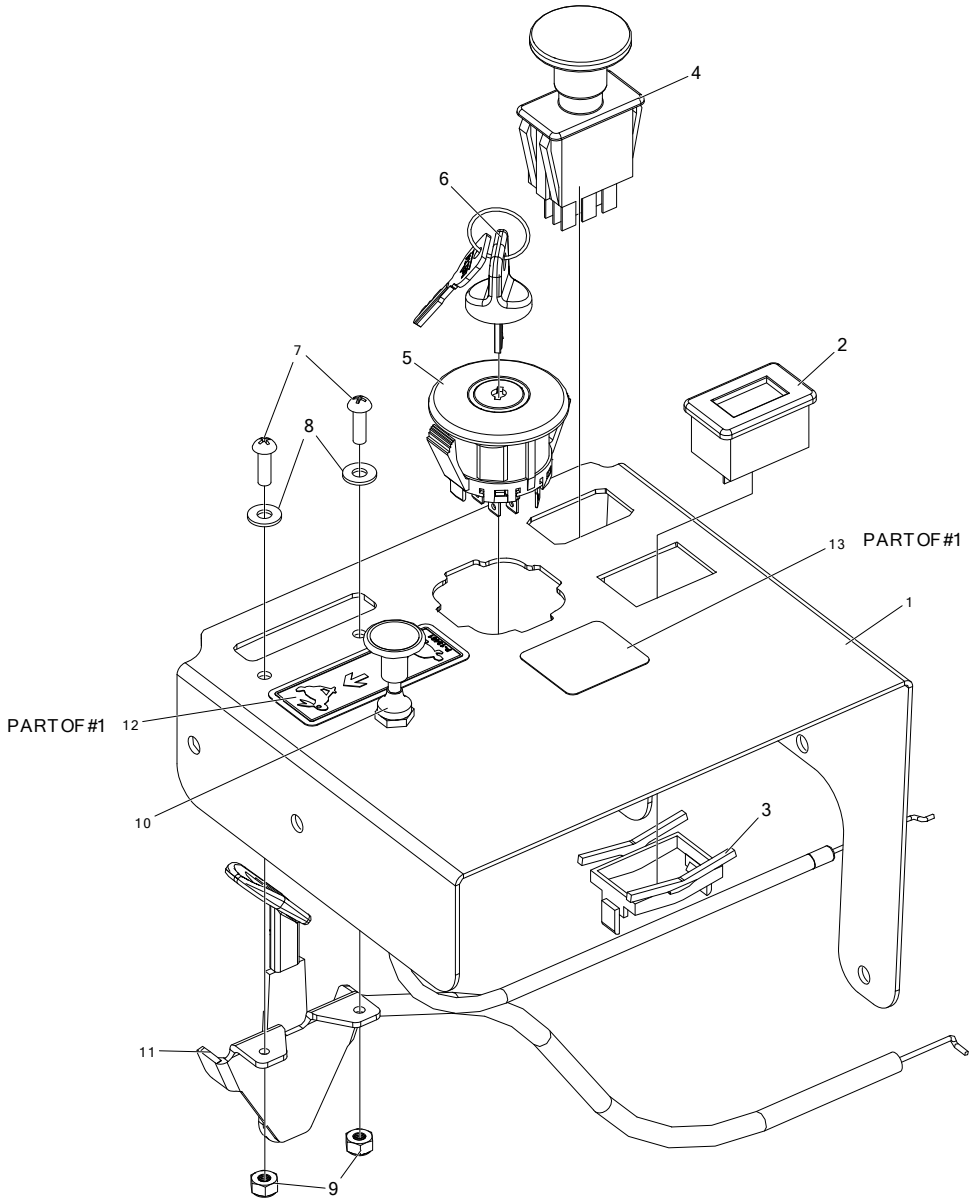


| ITEM # | QTY | PART # | DESCRIPTION |
|---|---|---|---|
| 1 | 1 | 714-599A | CONTROL PANEL W/ DECALS |
| 2 | 1 | E-5878 | HOUR METER |
| 3 | 1 | E-6369 | RETAINER CLIP |
| 4 | 1 | E-6403 | PTO SWITCH |
| 5 | 1 | E-6717 | IGNITION SWITCH, 4 POSITION |
| 6 | 1 | E-6718 | KEY ASSEMBLY |
| 7 | 2 | F-1022-26 | MACHINE SCREW, RND, 10-32 X 5/8, SLOTTED, CZ |
| 8 | 2 | F-1071 | WASHER, FLAT #10, ZINC PLATED #10 SAE FLAT WASHER |
| 9 | 2 | F-1448 | LOCKNUT, 10-32 NYLOC YELLOW PLTD |
| 10 | 1 | H-2287 | CHOKE CABLE, 43-1/2" |
| 11 | 1 | H-2610 | THROTTLE CABLE, 38", KAWASAKI |
| 12 | 1 | P-13481 | DECAL, THROTTLE CONTROL |
| 13 | 1 | P-13750 | DECAL, TAKE KEY |

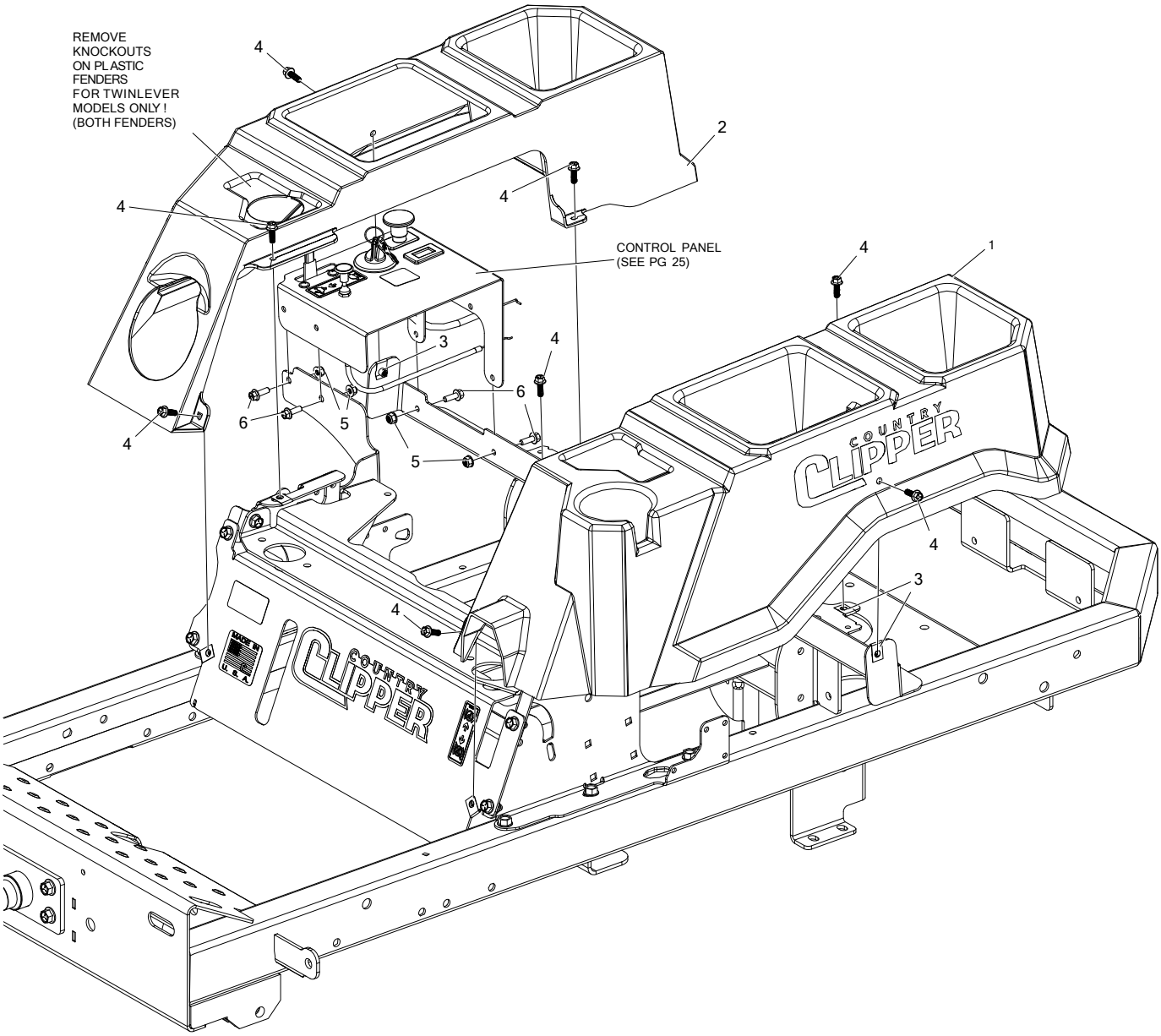


| ITEM # | QTY | PART # | DESCRIPTION |
|---|---|---|---|
| 1 | 1 | H-3251 | FENDER, LH |
| 2 | 1 | H-3252 | FENDER, RH |
| 3 | 4 | F-1858 | U-NUT, 1/4-20 THRD |
| 4 | 8 | F-2119 | FHCS, 1/4-20 X 3/4", YZ, GR5, LOCK PATCH |
| 5 | 4 | F-2132 | NUT, 1/4-20 NYLOC, FLANGED, YZ |
| 6 | 4 | F-2162 | FHCS, 1/4-20 X 3/4", YZ, GR5 |

# TRANSMISSION ASSEMBLY & RELATED PARTS

(LOOKING AT BOTTOM)

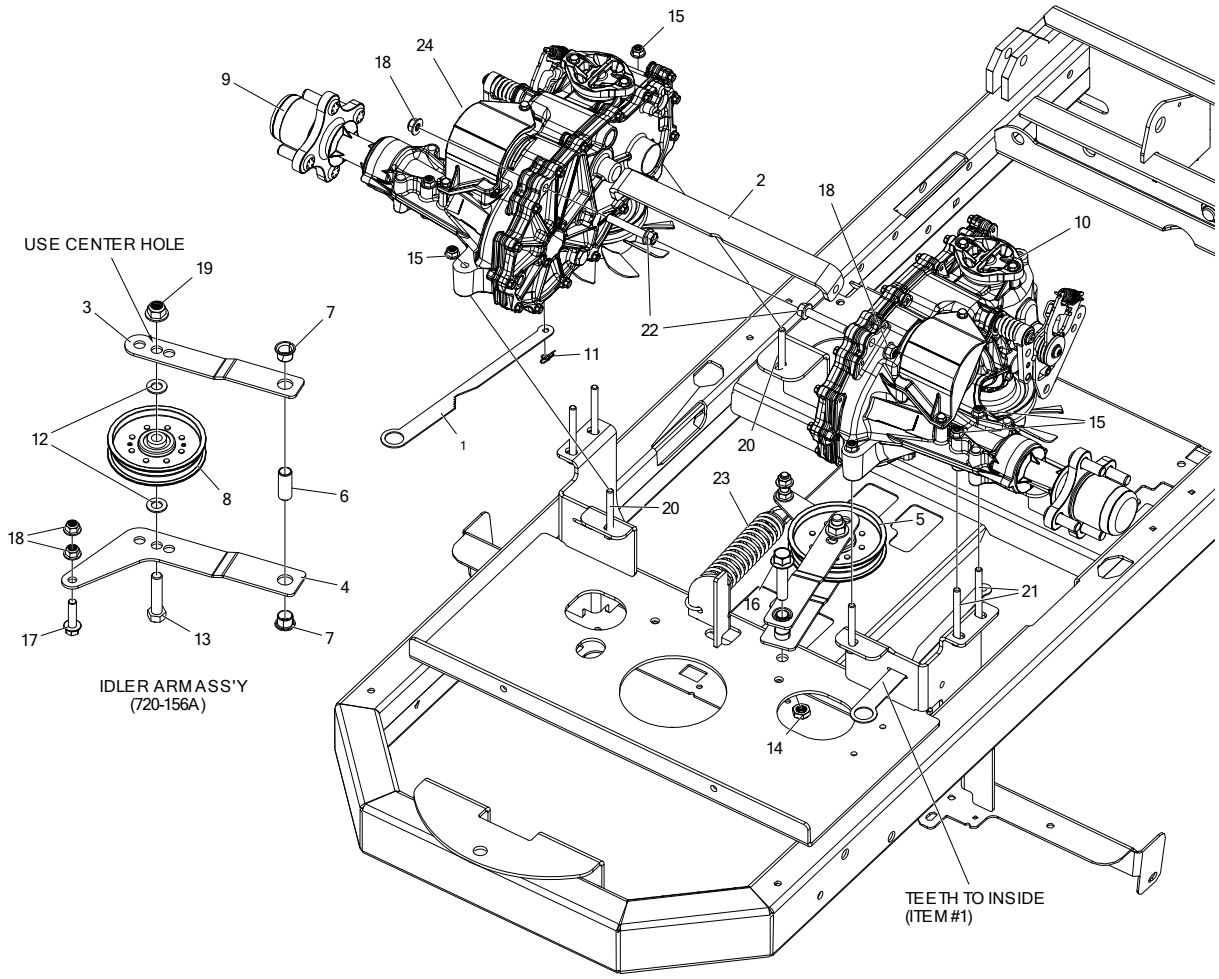


| ITEM # | QTY | PART # | DESCRIPTION |
|---|---|---|---|
| 1 | 2 | 714-454P | TAB, DUMP VALVE, COMMON |
| 2 | 1 | 714-521P | HYDRO CROSS BRACE |
| 3 | 1 | 714-592P | IDLER ARM, BOTTOM |
| 4 | 1 | 720-145P | IDLER ARM, TOP |
| 5 | 1 | 720-156A | IDLER ARM ASS'Y |
| 6 | 1 | 722-031P | MOUNTING PIN |
| 7 | 2 | D-3730 | BUSHING, DU 5/8 DIA X 1/2 LG |
| 8 | 1 | D-3924 | PULLEY, FLAT IDLER, 4.25 OD, NTN, DBL INSERT |
| 9 | 1 | D-4210-01 | TRANSAXLE, ZT-3400, TOP FAN, TANKLESS, RH |
| 10 | 1 | D-4210-02 | TRANSAXLE, ZT-3400, TOP FAN, TANKLESS, LH |
| 11 | 2 | F-1492 | RUE RING, 5/16 |
| 12 | 2 | F-1521 | WASHER, 1/2" CUSTOM, YZ |

| ITEM # | QTY | PART # | DESCRIPTION |
|---|---|---|---|
| 13 | 1 | F-1664 | HHCS, 1/2-13 X 2-1/4", YZ, GR5 |
| 14 | 1 | F-1966 | NUT, THIN, 1/2-13, NYLOC, FLANGED, YZ |
| 15 | 8 | F-2063 | NUT, 5/16-18, NYLOC, FLANGED, YZ |
| 16 | 1 | F-2144 | FHCS, 1/2-13 X 2-1/4", YZ, GR5 |
| 17 | 1 | F-2147 | FHCS, 3/8-16 X 1-1/2", YZ, GR5 |
| 18 | 4 | F-2151 | NUT, 3/8-16 NYLOC, FLANGED, YZ |
| 19 | 1 | F-2152 | NUT, 1/2-13 NYLOC, FLANGED, YZ |
| 20 | 4 | F-2177 | FHCS, 5/16-18 X 2-1/2, YZ, GR5 |
| 21 | 4 | F-2178 | FHCS, 5/16-18 X 3", YZ, GR5 |
| 22 | 2 | F-2218 | FHCS, 3/8-16 X 2-1/4", YZ, GR5 |
| 23 | 1 | H-2907 | SPRING,5.43 X 1-1/2", TAPERED ENDS |
| 24 | 2 | H-2567 | TRANSAXLE OIL FILTER |

# DAMPER, OFFSET BRACKET, & RETURN TO NEUTRAL HARDWARE

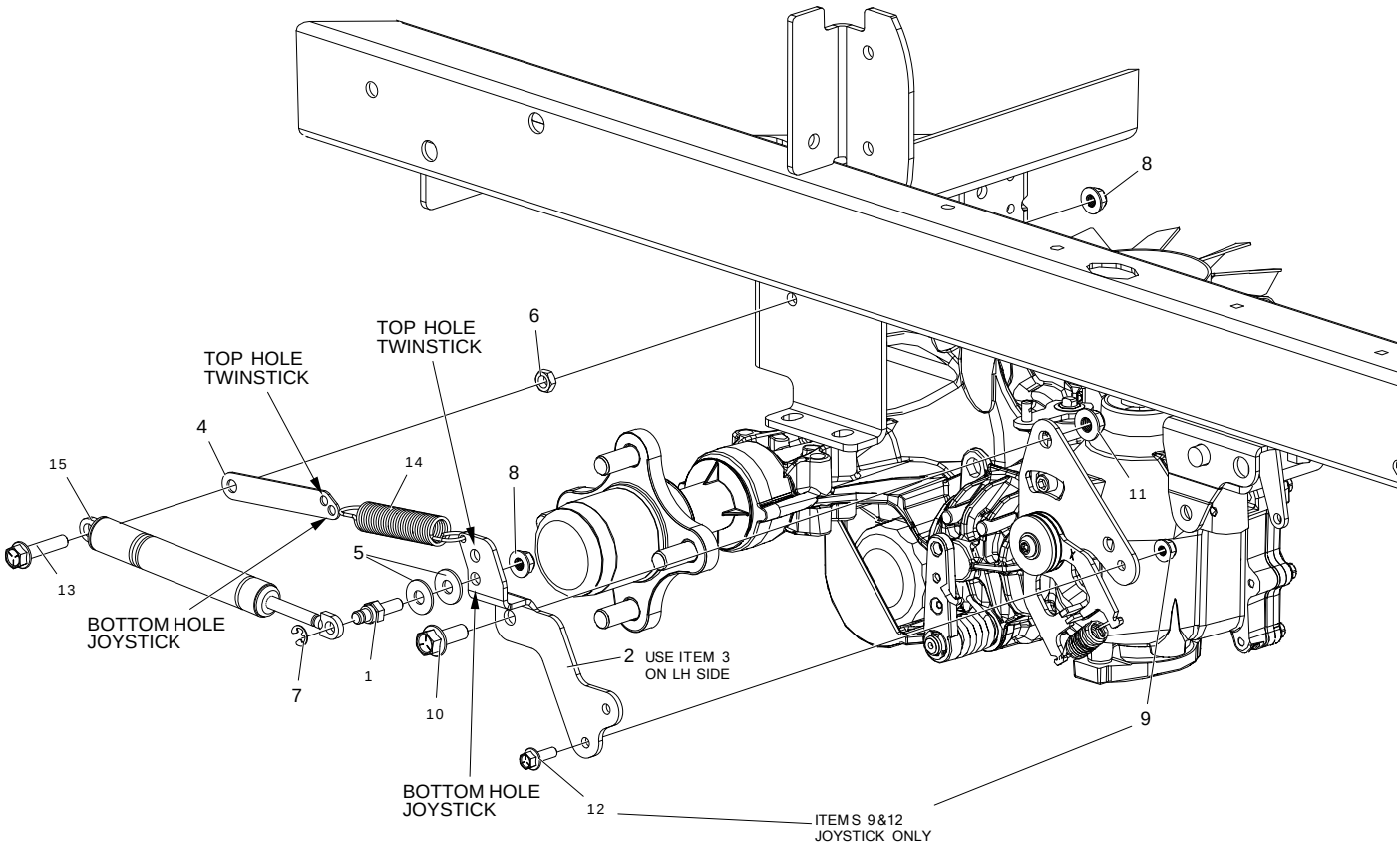


| ITEM # | QTY | PART # | DESCRIPTION |
|---|---|---|---|
| 1 | 2 | 638-028P | DAMPER BOLT 5/16-18 X 3/4" |
| 2 | 1 | 721-164P | BRACKET, DAMPER OFFSET, RH (RTN) |
| 3 | 1 | 721-163P | BRACKET, DAMPER OFFSET, LH (RTN) |
| 4 | 2 | 721-165P | PLATE, NEUTRAL SPRING EXTENSION |
| 5 | 4 | F-1009-02 | WASHER, FLAT, 5/16 |
| 6 | 2 | F-1011-02 | NUT, HEX 5/16-18 |
| 7 | 2 | F-1610 | RETAINING RING, EXTERNAL |
| 8 | 4 | F-2063 | NUT, 5/16-18, NYLOC, FLANGED, YZ |
| 9 | 2 | F-2132 | NUT, 1/4-20 NYLOC, FLANGED, YZ |
| 10 | 2 | F-2141 | FHCS, 3/8-16 X 1", YZ, GR5 |
| 11 | 2 | F-2151 | NUT, 3/8-16 NYLOC, FLANGED, YZ |
| 12 | 2 | F-2162 | FHCS, 1/4-20 X 3/4", YZ, GR5 |
| 13 | 2 | F-2248 | FHCS, 5/16-18 X 2-1/4", YZ, GR8 |
| 14 | 2 | H-1635 | SPRING, EXT, 3/4" OD X 4" OAL |
| 15 | 2 | H-2896 | DAMPER |

# SEAT BASE & ISOLATORS

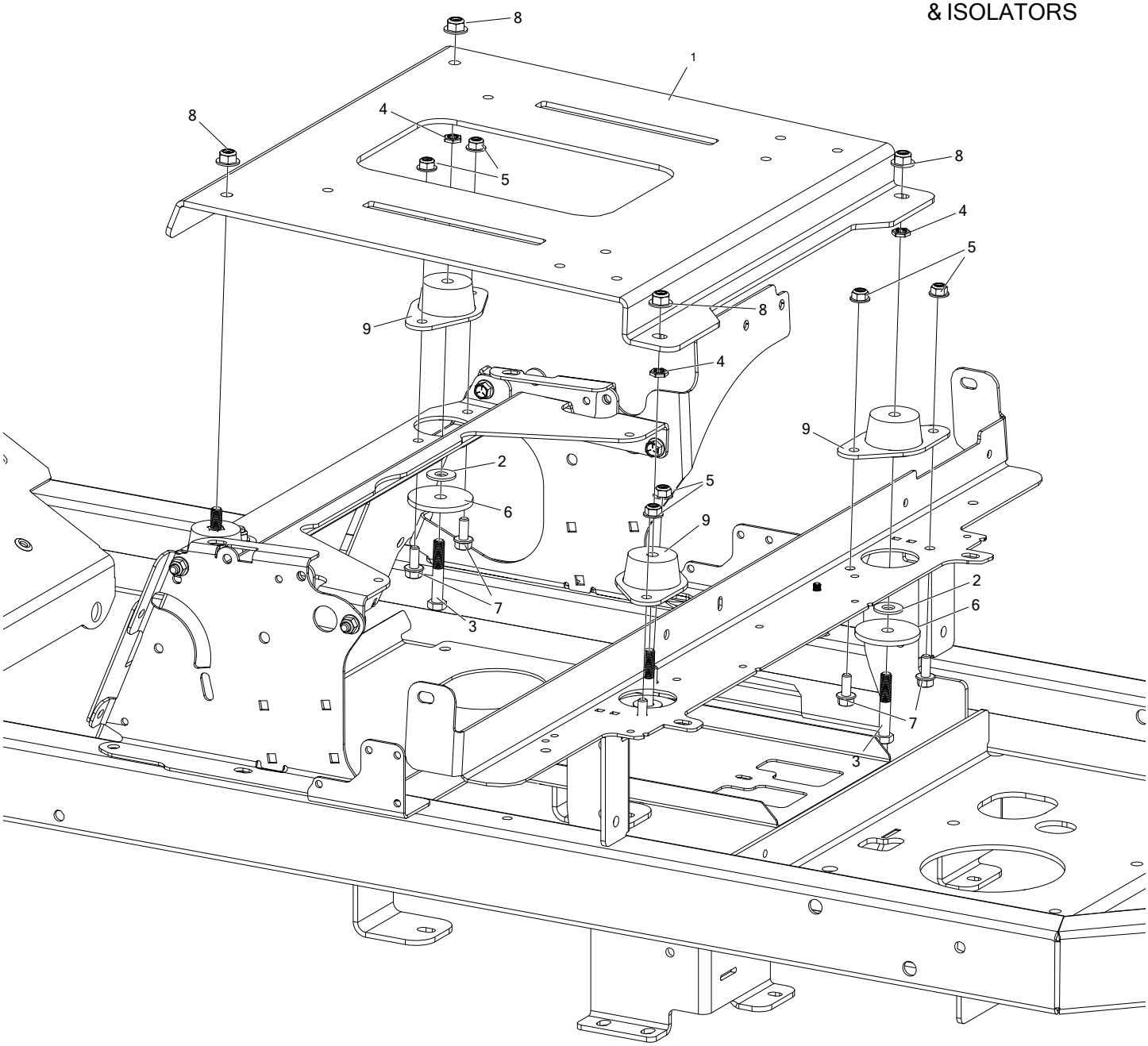


| ITEM # | QTY | PART # | DESCRIPTION |
|---|---|---|---|
| 1 | 1 | 721-135P | PAN, SEAT MOUNT |
| 2 | 4 | F-1009-03 | WASHER, FLAT, 3/8, YZ |
| 3 | 4 | F-2336 | HHCS, 3/8-16 X 2-1/4”, GR5 |
| 4 | 4 | F-1179 | NUT, HEX PAL, 3/8-24, HEX LOCK |
| 5 | 8 | F-2063 | NUT, 5/16-18, NYLOC, FLANGED, YZ |
| 6 | 4 | F-2102 | WASHER .406ID X 2.25OD X 7GA THK |
| 7 | 8 | F-2120 | FHCS, 5/16-18 X .75, YZ, GR5 |
| 8 | 4 | F-2151 | NUT, 3/8-16 NYLOC, FLANGED, YZ |
| 9 | 4 | H-2734 | VIBRATION ISOLATOR |

# SEAT, ARM RESTS, & RELATED PARTS

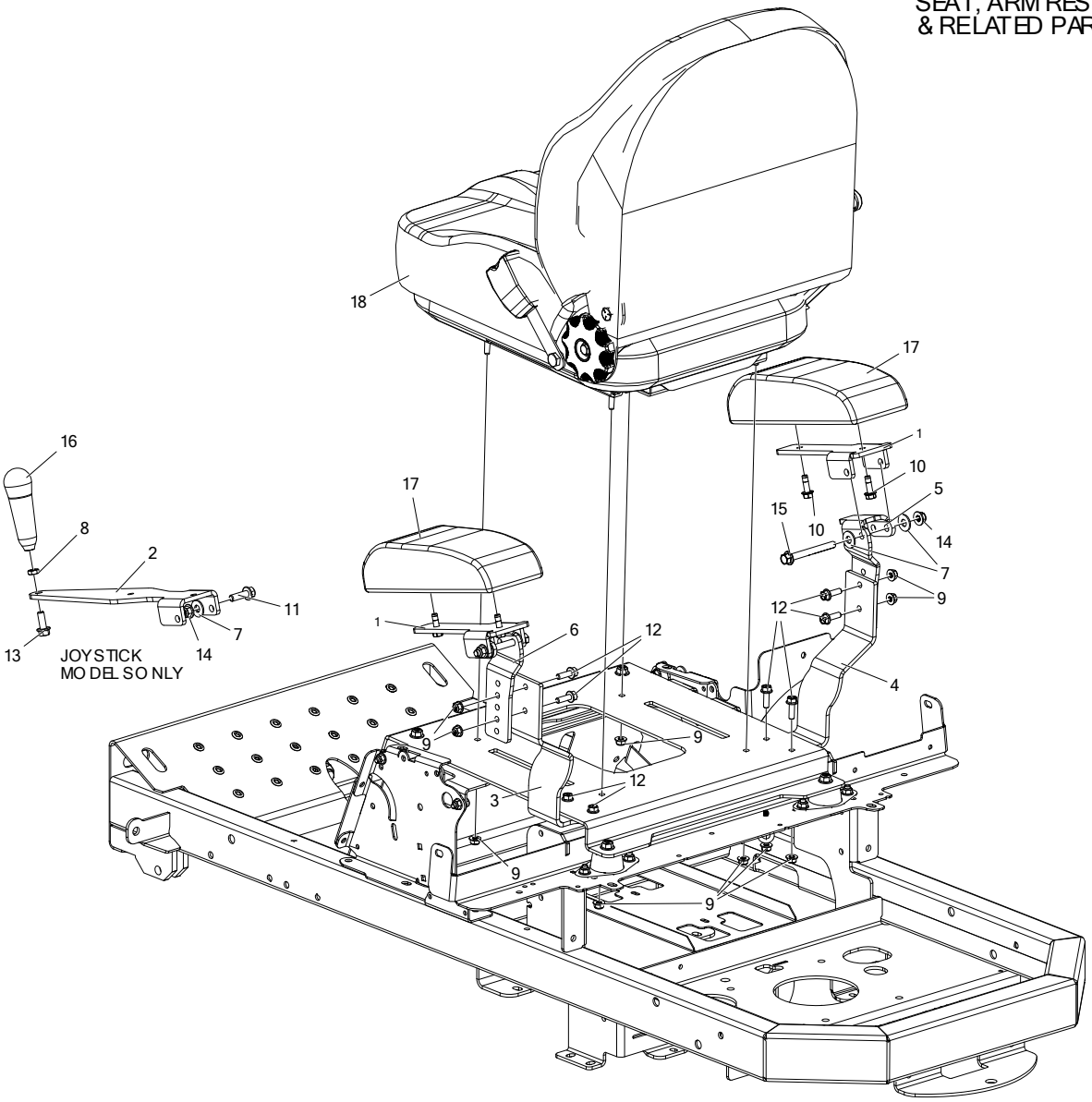


| ITEM # | QTY | PART # | DESCRIPTION |
|---|---|---|---|
| 1 | 2 | 720-138P | BRACKET, PIVOTING ARM REST (TWINSTICK) |
| - | 1 | 720-138P | BRACKET, PIVOTING ARM REST (JOYSTICK) |
| 2 | 1 | 721-141P | ARM REST BRACKET, JS, (FIXED) |
| 3 | 1 | 721-167P | ARM REST, BASE, LH, HINGED (ADJ) |
| 4 | 1 | 721-168P | ARM REST, BASE, RH, HINGED (ADJ) |
| 5 | 1 | 724-167P | ARM REST, MOUNT, RH, HINGED, (ADJ) |
| 6 | 1 | 724-185P | ARM REST, MOUNT, LH, HINGED, (ADJ) |
| 7 | 5 | F-1009-03 | WASHER, FLAT, 3/8" |
| 8 | 1 | F-1486 | NUT, JAM, 3/8-16, YZ |
| 9 | 12 | F-2063 | NUT, 5/16-18, NYLOC, FLANGED, YZ |
| 10 | 4 | F-2121 | FHCS, 5/16-18 X 1", LOCK PATCH, YZ, GR5 |
| 11 | 1 | F-2125 | FHCS, 3/8-16 X 1-1/4, YZ, GR5 |
| 12 | 8 | F-2148 | FHCS, 5/16-18 X 1", YZ, GR5 |
| 13 | 1 | F-2141 | FHCS, 3/8-16 X 1", YZ, GR5 |
| 14 | 3 | F-2151 | NUT, 3/8-16 NYLOC, FLANGED |
| 15 | 2 | F-2303 | FHCS, 3/8-16 X 3-1/2", YZ, GR5 |
| 16 | 1 | H-2764 | HANDLE, JOYSTICK |
| 17 | 2 | H-2799 | PAD, ARM REST |
| 18 | 1 | H-3159 | SEAT, CHALLENGER |
| - | 1 | H-3213 | SEAT BACK COVER FOR H-3159 |

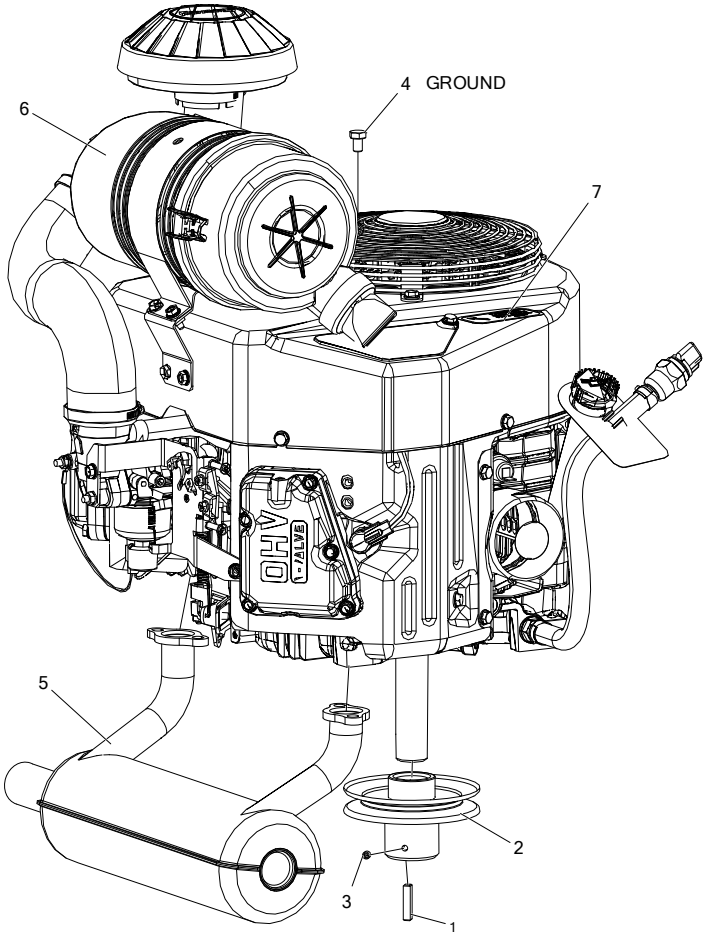


KAWASAKI

23.5 HP - FX730

(USE THROTTLE CABLE H-2610 & CHOKE CABLE H-2287)

| ITEM # | QTY | PART # | DESCRIPTION |
|---|---|---|---|
| 1 | 1 | 621-113P | SQUARE KEY 1/4 X 1/4 X 1-1/4 |
| 2 | 1 | D-3974 | MOTOR, PULLEY, 4.51 W/ 1-1/8" SHAFT |
| 3 | 1 | F-1228 | SET SCREW, SOCKET, 1/4-20 X 1/4", W/NYLOC |
| 4 | 1 | F-2243 | HHCS, M8-1.25 X 12, YZ, GR8 |
| 5 | 1 | H-3020 | MUFFLER. KAWASAKI FR730 |
| 6 | 1 | M-5440 | ENGINE, KAW, 23.5HP FX730, 3400RPM |
| 7 | 1 | P-10077-11 | DECAL, "PERIODICALLY CLEAN" |

# ENGINE & CLUTCH MOUNTING & RELATED PARTS

(LOOKING AT BOTTOM)

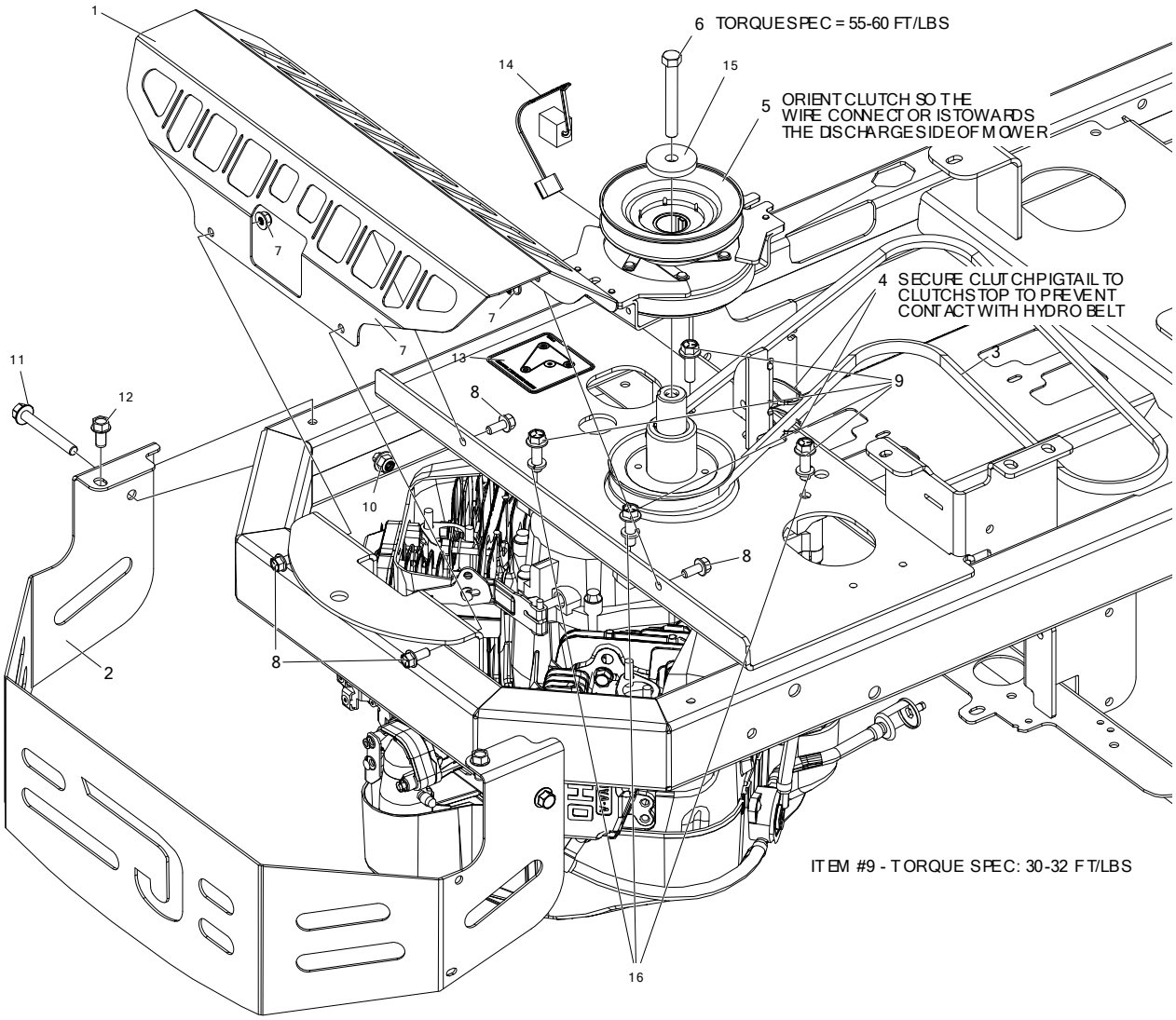


| ITEM # | QTY | PART # | DESCRIPTION |
|---|---|---|---|
| 1 | 1 | 714-611P | GUARD, MUFFLER |
| 2 | 1 | 721-117P | GUARD, ENGINE |
| 3 | 1 | D-3769 | V BELT A-67 KEVLAR |
| 4 | 2 | E-5842 | WIRE TIE |
| 5 | 1 | E-6780 | CLUTCH, OGURA GT2.75, 150 FT/LBS, 1-1/8" BORE |
| 6 | 1 | F-2139 | HHCS, 7/16-20 X 2", YZ, GR8 |
| 7 | 4 | F-2063 | NUT, 5/16-18, NYLOC, FLANGED, YZ |
| 8 | 4 | F-2120 | FHCS, 5/16-18 X 3/4", YZ, GR5 |
| 9 | 4 | F-2125 | FHCS, 3/8-16 X 1-1/4", YZ, GR5 |
| 10 | 2 | F-2151 | NUT, 3/8-16 NYLOC, FLANGED, YZ |
| 11 | 2 | F-2180 | FHCS, 3/8-16 x 3", YZ, GR5 |
| 12 | 2 | F-2219 | HFCS, 3/8-16 X 3/4", CZ, THD FORMING |
| 13 | 1 | P-12918 | DECAL, HYDRO BELT ROUTING |
| 14 | 1 | E-6575 | HARNESS ADAPTER, CLUTCH PIGTAIL (13.75") |
| 15 | 1 | 720-124P | WASHER, OGURA CLUTCH, 0.471 ID X 1.875 OD X 0.25 THK |
| 16 | 3 | F-1019-03 | LOCK WASHER, HVY, 3/8, YZ |

# WIRE HARNESS & RELATED PARTS

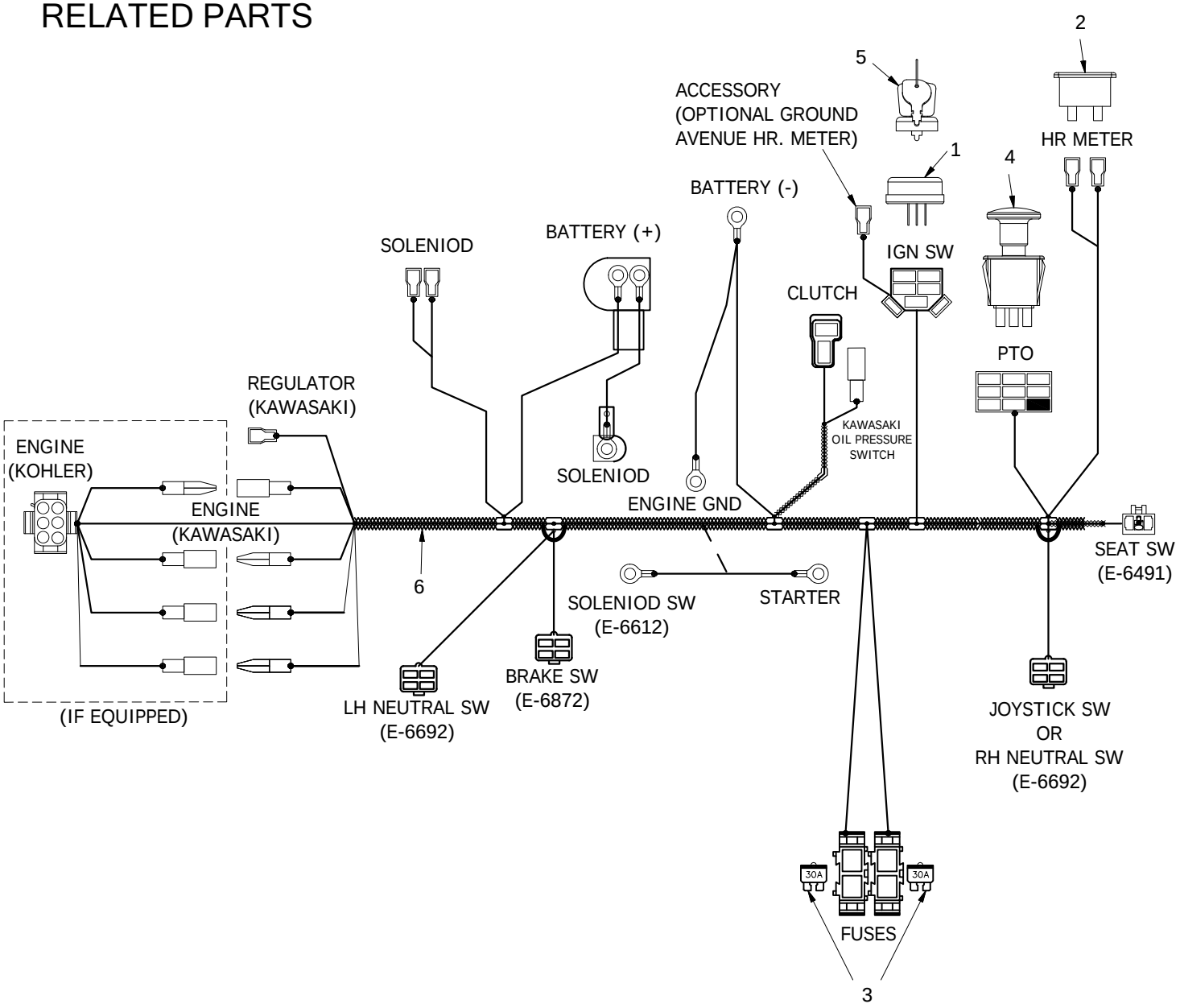


| ITEM # | PART # | DESCRIPTION |
|---|---|---|
| 1 | E-6717 | IGNITION SWITCH, 4 POSITION |
| 2 | E-5878 | HOUR METER |
| 3 | E-6207 | FUSE, #ATC-30 |
| 4 | E-6403 | PTO SWITCH |
| 5 | E-6718 | KEY ASSEMBLY |
| 6 | E-6870 | WIRE HARNESS, COMMON (BRAKE TO START) |

# WIRING SCHEMATIC

(BRAKE TO START)

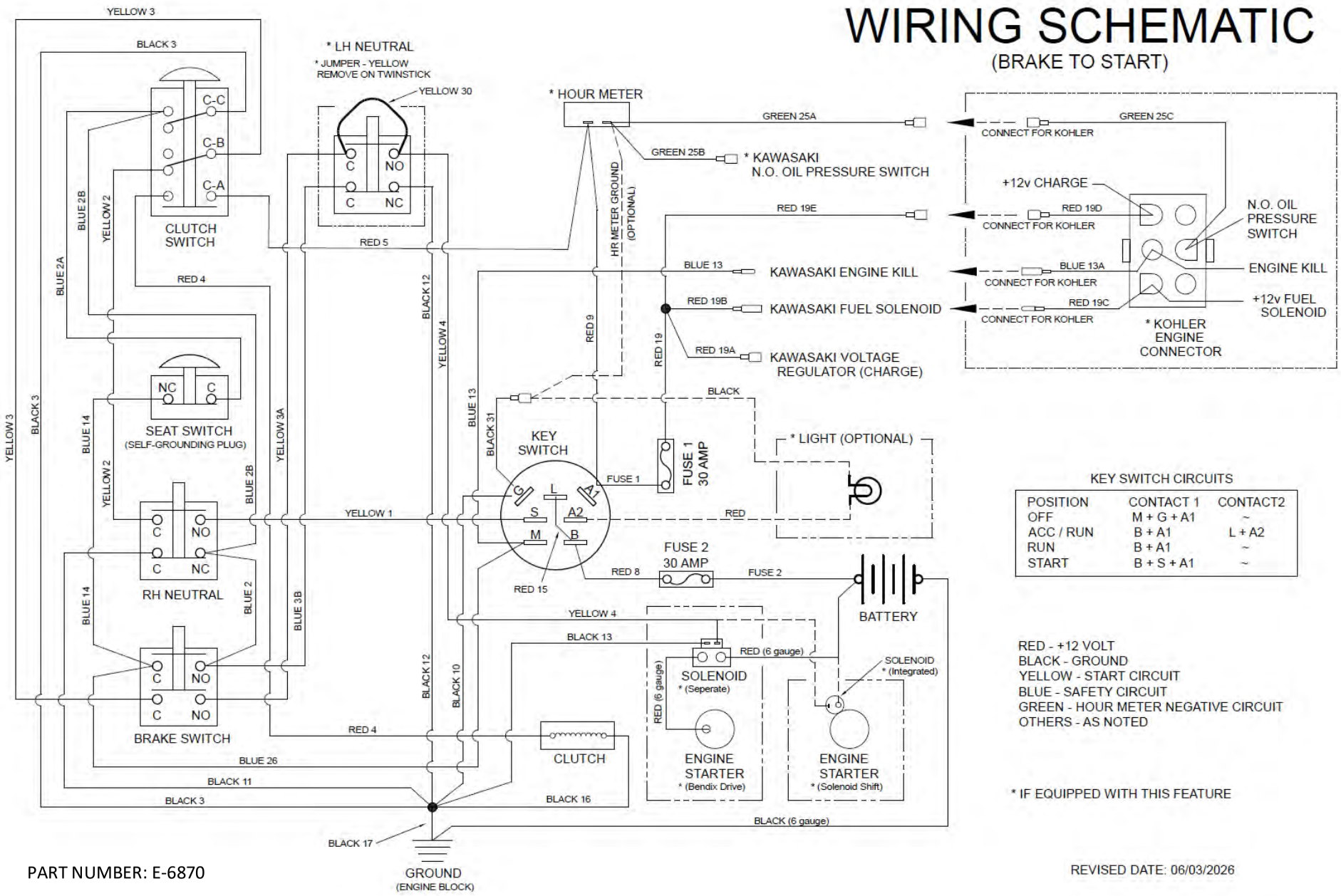


KEY SWITCH CIRCUITS

| POSITION | CONTACT 1 | CONTACT2 |
|---|---|---|
| OFF | M + G + A1 | ~ |
| ACC / RUN | B + A1 | L + A2 |
| RUN | B + A1 | ~ |
| START | B + S + A1 | ~ |

RED - +12 VOLT
BLACK - GROUND
YELLOW - START CIRCUIT
BLUE - SAFETY CIRCUIT
GREEN - HOUR METER NEGATIVE CIRCUIT
OTHERS - AS NOTED

* IF EQUIPPED WITH THIS FEATURE

PART NUMBER: E-6870

REVISED DATE: 06/03/2026

# MY2027 SPECIFICATIONS

## CHALLENGER – Joystick Steering

| MODEL | 23552KAJ - D530 / D530W | 23560KAJ - D530 / D530W |
|---|---|---|
| Engine | 23.5 H.P. Kawasaki FX730V (726cc) | |
| Hydrostatic Transmissions | Hydro-Gear ZT-3400 | |
| Steering Control | Single Joystick | |
| Fuel Capacity | 7 Gallons | |
| Tires, Rear | 22 x 11-10 | |
| Tires, Front | 13 x 6.5-6 | |
| Turning Radius | Zero-Turn | |
| Ground Speed<br>Forward<br>Reverse | <br>9 MPH ( infinitely variable)<br>5 MPH ( infinitely variable) | |
| Length | 79” | |
| Height, | 49” (R.O.P.S. Folded), 75” (Top of R.O.P.S.) | |
| Width, Tractor (outside rear tires) | 49” | |
| Width, Deck<br>(with deck chute up)<br>(with deck chute down) | 53”<br>65” | 61”<br>73” |
| Cutting Width | 52” | 60” |
| Blade Length (3 per deck) | 18-3/8” | 21” |
| Cutting Height | 1-1/2” to 5” (¼” increments) | |
| Weight (actual) | 953# | 963# |
| Standard Features | Hour Meter, Electric Start, Hinged (RH) Arm Rest (Adjustable), Cup Holder, Front Step, ContourDTS Deck Suspension, Auto Detach Stand-Up Deck, R.O.P.S. (Roll Over Protection System), Suspension Seat w/ 2-1/4" Adjustable Travel, Vibration Isolators, Adjustable Seat Back Recline and Seat Back Pocket | |

## CHALLENGER – Twinstick Steering

| MODEL | 23552KAT - D530 / D530W | 23560KAT - D530 / D530W |
|---|---|---|
| Engine | 23.5 H.P. Kawasaki FX730V (726cc) | |
| Hydrostatic Transmissions | Hydro-Gear ZT-3400 | |
| Steering Control | Twinstick Controls | |
| Fuel Capacity | 7 Gallons | |
| Tires, Rear | 22 x 11-10 | |
| Tires, Front | 13 x 6.5-6 | |
| Turning Radius | Zero-Turn | |
| Ground Speed<br>Forward<br>Reverse | <br>9 MPH ( infinitely variable)<br>5 MPH ( infinitely variable) | |
| Length | 79” | |
| Height, | 49” (R.O.P.S. Folded), 75” (Top of R.O.P.S.) | |
| Width, Tractor (outside rear tires) | 49“ | |
| Width, Deck<br>(with deck chute up)<br>(with deck chute down) | 53”<br>65” | 61”<br>73” |
| Cutting Width | 52” | 60” |
| Blade Length (3 per deck) | 18-3/8” | 21” |
| Cutting Height | 1-1/2” to 5” (¼” increments) | |
| Weight (actual) | 961# | 971# |
| Standard Features | Hour Meter, Electric Start, Hinged Arm Rests (Adjustable), Cup Holder, Front Step, ContourDTS Deck Suspension, Auto Detach Stand-Up Deck, R.O.P.S. (Roll Over Protection System), Suspension Seat w/ 2-1/4" Adjustable Travel, Vibration Isolators, Adjustable Seat Back Recline and Seat Back Pocket | |

*Specifications subject to change without prior notice*

# PRODUCT MANUAL

# CHALLENGER
# D530 / D530W

**Country Clipper Division**
Shivvers Manufacturing, Inc.
613 W. English St.
Corydon, IA 50060-0467
Ph. 641-872-2544
Fax. 641-872-1593

P-13824 (Rev B)