COUNTRY CLIPPER
ZERO TURN MOWER

XLT

C330 / C330W

SERIAL RANGE: 26264001 - _____

PRODUCT MANUAL

Common Service Parts & Mower Information

Manuals

Country Clipper Safety Instructions and Operation

Country Clipper Repair Parts

Warranty

Country Clipper Warranty

Kawasaki Engine Warranty

Hydro-Gear Warranty

Battery Warranty

Additional Information

Country Clipper Product Specifications

Notes/Service Records

P-13823 (Rev B)

XLT Service Parts & Information

48” Blade	High Lift H-2882[1]	Low Lift H-2659	Gator H-2665	
52” Blade	High Lift H-2883[1]	Low Lift H-2660	Gator H-2666	
60” Blade	High Lift H-2885[1]	Low Lift H-2661	Gator H-2667	
48” Deck Belt	D-3775-W			
52” Deck Belt	D-3951			
60” Deck Belt	D-3776-W			
Transaxle Drive Belt	D-3769			
Transaxle	Hydro-Gear ZT-3100			
Transaxle Hydraulic Oil	20W-50 | API SL			
Transaxle Oil Volume	4 Quarts (2 quarts per Transaxle)			
Tire Pressure (Recommended 12 PSI / 83kPa)	Front 10 to 16 PSI / 69 to 110 kPa		Rear 10 to 16 PSI / 69 to 110 kPa	
Engine	Kawasaki* FR730V			
Engine Oil Filter	Kaw PN 490650721BK*			
Engine Oil	SAE 10W-30* or 40* API SL or Higher*			
Air Filter	Kaw PN 110130752*			
Spark Plug	NGK BPR4ES*			
Engine RPM	3400 $\pm$ 100			

*** Please consult the engine owner’s manual for specific maintenance procedures and requirements.**

[1] Standard blade shipped with mower.

Mower Information	
Date of Purchase:	
Mower Model Number:	
Mower Serial Number:	
Engine Spec Number:	
Hydro Serial Number (RH):	
Hydro Serial Number (LH):	

COUNTRY CLIPPER
ZERO TURN MOWER

Safety Instructions and Operation

Table of Contents – Safety Instructions and Operation

BASIC INFORMATION 1.1
- Warranty Registration 1.1
- Model/Serial Number 1.1
- Parts/Service 1.1

MOWER SAFETY GUIDELINES 2.1
- Slope Operation 2.2
- Children 2.2
- Hauling 2.2
- Towing 2.3
- Service (Safe Handling of Gasoline) 2.3
- General Service 2.3
- Safety Interlock System 2.4
- Roll Over Protection Structure (ROPS) 2.4
- Safety Alerts 2.4
- Safety Decals 2.5

CONTROLS 3.1
- Control Descriptions 3.2
- Control Decals 3.2

START UP & OPERATION 4.1
- Pre-Operation Checklist 4.1
- Starting the Engine 4.2
- Stopping the Engine 4.3
- Roll Over Protection Structure (ROPS) 4.3
- Mower Driving Operation 4.5
- Deck Cut Height Adjustment 4.7
- Blade Engagement 4.10
- Mowing Recommendations 4.10
- Transmission Free Wheel Release 4.11
- Mower Transportation 4.12
- Mower Storage 4.12
- Preseason Mower Prep 4.13
- Mower Towing 4.13

MAINTENANCE 5.1
- Maintenance Schedule 5.1
- Maintenance Introduction 5.2
- Engine Maintenance 5.3
- Grease Points 5.4
- Tires 5.5
- Belts 5.6
- Electrical System 5.6
- Deck Service 5.7
- Mower Blade Service 5.10
- Hydraulic Drive Service 5.12
- Standard Operation Adjustments 5.14

TROUBLESHOOTING 6.1

BELT ROUTING 7.1

MAINTENANCE RECORD 8.1

Section 1... Basic Information

Thank you for purchasing a new Country Clipper mower. This manual will assist the operator in the proper operation and maintenance of the mower. Following the information and instructions provided in the manual can help you attain years of performance from your Country Clipper mower.

1.1 Country Clipper factory fills the engine with 10W-30 conventional engine oil (API Service Class SL or Higher). Consult engine owner's manual for specific oil recommendations.

1.2 Typically, 2 quarts of oil are required per engine oil change with filter. Consult engine owner's manual for specific oil recommendations and capacity.

1.3 Country Clipper uses 20W-50 conventional engine oil to fill the hydraulic transmission drive. (API Service Class SL or Higher)

1.4 Country Clipper recommends NLGI #2 grease for grease points.

Warranty Registration

The Warranty Registration must be completed within 30 days from date of purchase to validate the warranty. As the new equipment owner, you are expected to confirm that the form is completed and documentation forwarded to Country Clipper Mfg. at the time of delivery. **Warranty registration should be completed by the selling dealership either by submitting through the online registration site or mailing the registration card to Country Clipper.** The warranty is nontransferable.

Model/Serial Number

Your model & serial number can be located on the frame rail just above the grass discharge side of the deck. These numbers will be needed when ordering service replacement parts.

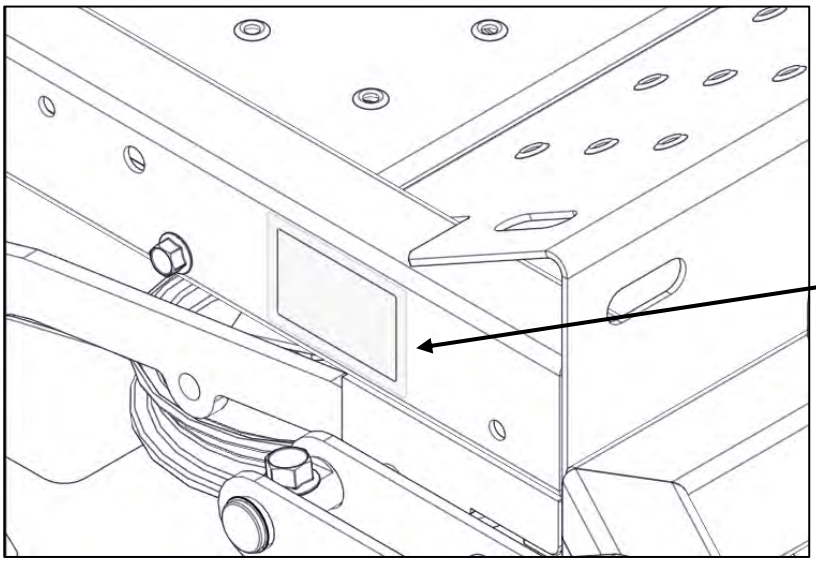

Model & Serial Number Tag

MEETS ANSI 5395-3-2024 SAFETY STANDARDS
SHIVVERS MFG
614 W. ENGLISH ST. CORYDON, IA 50060
EMISSION CONTROL INFORMATION
THIS EQUIPMENT MEETS U.S. EPA EVAP STANDARDS
EPA FAMILY NAME: **TSHVPNHEQZTR**
MODEL # **XXXXXXXX-XXXX**
SERIAL # **XXXXXXXX**
MFG DATE: **MONTH/ YEAR**

Parts/Service

Genuine Country Clipper replacement parts must be used on your mower for warranty consideration. Replacement parts are available through your Country Clipper Dealer. Remember to provide the following information from your mower when ordering service parts:

1. Correct Serial Number
2. Correct Model Number
3. Correct Part Number

Warranty repair and service must be performed through your Country Clipper Dealer. Visit www.countryclipper.com to locate your nearest dealer.

Section 2... Mower Safety Guidelines

This mower meets or exceeds the **5395-3-2024** safety standards of the **American National Standards Institute**, in effect at the time of production. However, improper maintenance or use by the owner or operator can result in injury. To reduce the potential for injury, comply with these safety instructions. At Country Clipper, we share your desire to protect you, your family, friends, and other bystanders from accidental injury. Never allow untrained people to operate the mower. This mower is capable of throwing objects and amputating hands and feet. Always follow all safety instructions to avoid serious injury or death.

2.1 Before operating, adjusting, or servicing your Country Clipper mower read, understand and follow all instructions in this manual including the engine owner's manual.

2.2 Keep hands and feet away from rotating parts or under the mower. Keep clear of the deck discharge area and/or blades while in operation. Turn the engine off before servicing these areas.

2.3 Disengage blades when not mowing. Shut off the engine and wait for all rotating parts to stop prior to cleaning, inspecting, servicing, removing grass catcher, and/or unclogging the discharge chute.

2.4 Always remain seated during operation of the mower. If equipped with Roll Over Protection Structure (ROPS) and in the upright position, always buckle yourself in the seat.

2.5 Mower must be operated by responsible adults with the proper instruction and training on safe operation.

2.6 Clear area to be mowed of debris that could be propelled by the blades such as rocks, wire, toys, sticks, etc.

2.7 Maintain a safe distance from people and pets prior to and during operation of the mower. Disengage blades and shut the engine off if anyone enters the area.

2.8 Never allow passengers.

2.9 Do not mow in reverse unless absolutely necessary. Always look down and behind before and during backing up.

2.10 Never direct mower discharge toward people or animals. Avoid directing discharge material toward walls or obstructions as material may ricochet back toward the operator. Disengage blades when crossing gravel surfaces.

2.11 Never operate the mower without the discharge chute, grass catcher, or other safety devices in place and functioning properly. Periodically check for signs of wear or deterioration and replace as needed.

2.12 Slow down during turns.

2.13 Know the location and operation of all controls; especially brake operation and how to disengage the mower blades.

2.14 Speed and/or direction of travel is affected instantly by movement of drive control lever(s). Avoid rapid change of direction and stroke of the drive control lever(s).

2.15 Always disengage blades, place drive control lever(s) in neutral lock, engage parking brake, and remove ignition key when leaving operators seat. Never leave a running mower unattended.

2.16 Always operate mower during daylight or with adequate working artificial lights. Never operate mower during inclement weather (such as heavy precipitation, high winds, lightening, etc.)

2.17 Do not operate the mower if you are fatigued or under the influence of any drugs or alcohol.

2.18 Watch for traffic when operating near or crossing roadways and sidewalks.

2.19 Wear appropriate eye protection when operating or servicing the mower.

2.20 Wear appropriate ear protection, non-slip - closed toe shoes, and long pants during operation of the mower. This will help avoid hearing loss, accidental slips and provide protection from flying debris.

2.21 Assure extra care is taken when loading and unloading the mower on a trailer or truck.

2.22 Stay alert of surroundings. Watch for rocks, stumps, mounds, depressions, low hanging limbs or other objects that could be a potentially hazardous while mowing.

2.23 Prevent fires by keeping engine and exhaust areas clear of grass clippings and other debris. Do not park or back mower over or immediately adjacent to flammable materials. Do not mow on or into piles of leaves. This may cause the leaves to become lodged around the engine and muffler and catch fire.

Slope Operation

Operation on slopes, hills, and/or embankments is a key factor that can cause loss of control or tip over accidents that can result in severe injury or death. Operation on all slopes requires extra caution. Country Clipper recommends the operator survey the slope and terrain conditions prior to operating on or near a slope. Prudent discretion and judgement should be exercised to ensure safe operation. Country Clipper mowers are designed to maximize stability but as with all mowers, there are limitations. Grass, soil, and weather conditions along with the slope and terrain impact the maximum slope that can be mowed. A slope should be evaluated prior to each mowing to determine if conditions have changed that would lead to un-safe operation. Never operate on a slope greater than 15 degrees.

2.24 Back-up and drive down slopes, not across the face of a slope.
2.25 Avoid holes, ruts, bumps, rocks, or other hidden hazards. Uneven terrain could result in loss of control or overturn of the mower.
2.26 Avoid mowing on wet grass; the drive tires could lose traction.
2.27 Reduce speed and use gradual movements to start, stop and maneuver the mower.
2.28 To prevent loss of control on a slope avoid sharp turns, sudden changes in direction, and sudden stops and starts. If tires loose traction, disengage the blades and proceed slowly straight down the slope.
2.29 If equipped with a grass catcher or other attachment use extra care; they can affect the stability. Avoid using on steep slopes.
2.30 Do not try to stabilize the mower by putting your foot or hand on the ground.
2.31 Do not mow or drive near drop-offs, ditches, or embankments; sudden roll-over could occur if a wheel goes over the edge.
2.32 Avoid mowing slopes that have rocks, water, cliffs, and roadways at the bottom.

Children

Tragic accidents can occur if the operator is not alert to the presence of children. Children are often attracted to the mower and the mowing activity. Never assume that children will remain where you last saw them.

2.33 Keep children out of the operating area and under the watchful care of a responsible adult other than the operator.
2.34 Do not carry children, even with the blade(s) shut off. Children could fall off and be seriously injured or interfere with safe mower operation. Children who have been given rides in the past could suddenly appear in the mowing area for another ride and be run over or backed over by the mower.
2.35 Disengage blades and shut the engine off if a child enters the area.
2.36 Never allow children to operate the mower.
2.37 Never leave the running mower unattended, especially when children are present.
2.38 Always remove the ignition key when the mower is not in use.
2.39 Monitor the area for blind spots that may obstruct your view of a child (such as corners, shrubs, trees, ornaments, etc.)

Hauling

Caution should be exercised when loading and unloading a mower on a trailer or transport vehicle. Depending on the trailer or transport vehicle; the ramp slope could cause loss of control or tip over.

2.40 Use full width ramps for loading and unloading a mower for transport.
2.41 Reduce speed and use gradual movements to start, stop and maneuver the mower up the trailer ramp.
2.42 Set the park brake and secure the mower with tie downs before transporting.

Towing

2.43 Do not exceed recommendation for weight limits for towed equipment and towing on slopes.
2.44 Tow only with a mower designed with a hitch for towing.
2.45 Only use an approved hitch for the mower.
2.46 Keep children off the towed equipment.
2.47 Use extreme caution when towing on slopes; additional weight may cause loss of traction and control.
2.48 Do not attempt a zero-turn with a towed implement.

Service (Safe Handling of Gasoline)

Use extreme caution when handling gasoline to avoid personal injury and/or property damage. Gasoline is very flammable and gasoline vapors are explosive.

2.49 Gasoline vapors ignite easily; extinguish all ignition sources prior to handling. (such as cigarettes, cigars, pipes, open flames, spark sources, etc.)
2.50 Only use approved gasoline containers.
2.51 Never remove gas cap or add fuel with the engine running.
2.52 Allow engine to cool before refueling.
2.53 Never refuel inside a building or other confined space such as an enclosed trailer.
2.54 Do not store machine or fuel container near open flames or source of ignition; water heaters, furnace, space heater, etc.
2.55 Remove gas powered equipment from the truck or trailer and refuel equipment on the ground. If not possible, use a portable container rather than gasoline pump nozzle.
2.56 Never fill gasoline containers inside a vehicle or on a truck or trailer bed with a plastic liner. Place container(s) on the ground away from vehicle before filling.
2.57 Keep fuel nozzle in contact with the rim of the fuel tank at all times until re-fueling is complete.
2.58 If fuel is spilled, do not attempt to start the engine and avoid creating any source of ignition until fuel vapors have dissipated.
2.59 If fuel is spilled on clothing, change clothing immediately.
2.60 Only refuel on level ground to avoid over filling.
2.61 Never over fill fuel tank. Replace gas cap securely when re-fueling is complete.

General Service

2.62 Never operate engine in an enclosed space where dangerous carbon monoxide fumes can collect.
2.63 Do not touch hot surfaces on the machine.
2.64 Keep all nuts and bolts tight to ensure the equipment is in safe working condition. Never operate a poorly maintained mower.
2.65 Never interfere or tamper with intended function of a safety device. Check proper operation regularly.
2.66 Keep the entire mower free of grass, leaves, and other debris. Clean up any fuel or oil spillage on the mower, failure to do so, can affect the safety and operation. Additionally, it can increase the danger of a fire due to contact with a hot surface on the mower.
2.67 Allow mower to cool before storing.
2.68 If you hit something with the mower while mowing, turn the mower blades off, engage park brake, shut the engine off, and inspect for damage. Repair (if needed) prior to restarting and operating the mower.
2.69 Never make adjustments or repairs with the engine running.
2.70 Mower blades are sharp. Wrap the blade or wear gloves before servicing them.
2.71 Check operation of the park brake frequently. Adjust and service as needed.
2.72 Maintain or replace safety decals as required.
2.73 If equipped with a grass catcher, inspect components and the discharge guard frequently and replace with manufacturer's recommended parts, as required.
2.74 Never allow untrained personnel to service mower. Understand service procedures before doing work.

2.75 Keep debris and grass off the mower to prevent premature parts failures or fires.

Safety Interlock System

Your Country Clipper mower is equipped with a safety interlock system. This system is integrated into the operator controls and seat to prevent serious injury or death to the operator, bystanders, or property damage. Proper operation of this system is critical and should be checked frequently. **Note: operator must be seated properly on the mower during the test and the engine should be previously warmed up to operating temperature.**

Joystick Models… Neutral Lock is when the Joystick Drive Control Lever is in the "Down" position.

Twin Stick Models… Neutral Lock is when both Twin Stick Drive Control Levers are in the "Out" position.

2.76 The Blade Engagement Switch must be disengaged before the engine will start**.**

2.77 The Drive Control Lever(s) must be in the Neutral Lock position before the engine will start.

2.78 The Park Brake must be engaged (pulled up) before the engine will start.

2.79 The engine will stop if the Blade Engagement Switch is engaged when the operator leaves the drivers seat**.**

2.80 The engine will stop if the Drive Control Lever(s) are not in the Neutral Lock position when the operator leaves the driver's seat.

2.81 The engine will stop if the Park Brake is engaged and the Drive Control Lever(s) are not in the Neutral Lock position.

2.82 The engine will stop if the Park Brake is engaged and the Blade Engagement Switch is engaged.

Do not operate mower if any of these tests fail to produce the results indicated. Contact your Country Clipper dealer to troubleshoot and resolve the issue.

Safety Alerts

This safety alert symbol is used to call attention to a message intended to provide a reasonable degree of Personal Safety for operators and servicing personnel. All operators and mechanics should read this manual and be familiar with the safe operation and service procedures before proceeding. Improper operation and/or maintenance can result in personnel injury.

Additionally, "**IMPORTANT**" and "**NOTE**" may be used to call attention to special mechanical information and noteworthy general information.

	Danger
	…Denotes immediate hazards that WILL result in severe injury or death.

	Warning
	…Denotes a hazard or unsafe practice which COULD result in severe personal injury or death.

	Caution
	…Denotes a hazard or unsafe practice which COULD result in minor or moderate personal injury.

The following illustrations depict the various safety decals used on the equipment with a brief explanation for those requiring one.

Safety Decals

P-13751 - WARNING

A – REMOVE KEY, READ OPERATORS AND MAINTENANCE MANUAL
B – **AVOID AMPUTATION INJURY** - KEEP GUARDS AND SHIELDS IN PLACE
C – **AVOID THROWN OBJECTS INJURY** - PICK UP EXCESS DEBRIS, KEEP THE DISCHARGE CHUTE IN THE DOWN POSITION OR DO NOT OPERATE WITHOUT THE COMPLETE ASSEMBLED MULCH OR GRASS BAGGER KIT
D – **AVOID RUNOVER / BACKOVER INJURY** – LOOK FOR BYSTANDERS BEFORE MOVING FORWARD OR REVERSE, DO NOT CARRY PASSENGERS
E – **AVOID ROLL-OVER INJURY** - BACK UP AND DRIVE DOWN TRAILER RAMPS
F – **AVOID ROLL-OVER INJURY** - BACK UP AND DRIVE DOWN SLOPES, USE LOW SPEEDS AND AVOID SUDDEN TURNS AND STOPS WHILE MOWING ON SLOPES 15 DEGREES OR LESS, STAY AT LEAST 10 FEET FROM DROP-OFFS, DITCHES, EMBANKMENTS, OR THE EDGE OF WATER

NO SMOKING DO NOT OVER FILL

P-13748 - WARNING

APPLY BRAKE REMOVE KEY

P-13750 - WARNING

AVOID AMPUTATION INJURY AVOID THROWN OBJECTS INJURY

B B C C

P-13749 - WARNING

DISCHARGE CHUTE OR GRASS CATCHER MISSING

P-13266 - DANGER

Replace Safety Decals when missing or illegible.
Contact your Country Clipper Dealer or Country Clipper for free replacement.

Section 3... Controls

Your Country Clipper mower has a variety of controls and switches that are used to operate and adjust key operational parameters of the mower. Make sure you become familiar and proficient in the use of these controls. A proficient understanding of the function of these controls will assure the operator's confidence and safety during operation and servicing the mower.

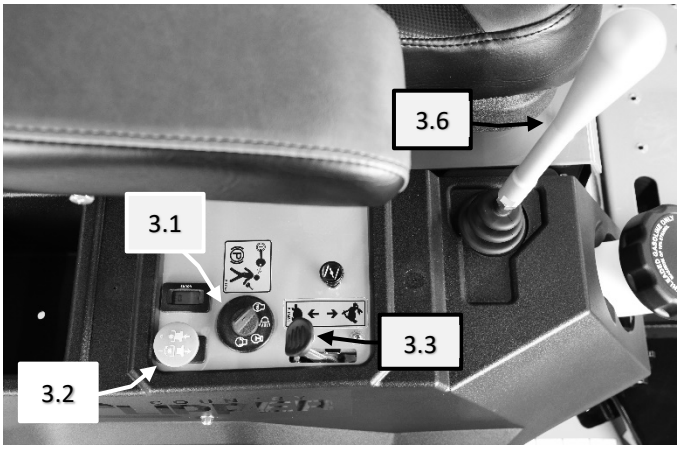

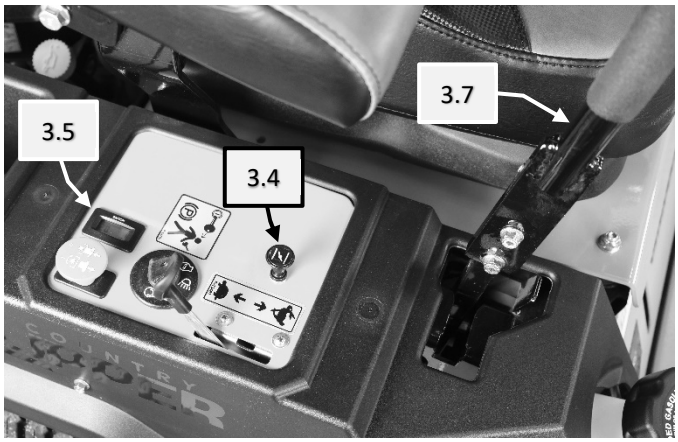

3.1 Ignition Switch
3.2 Blade Engagement Switch
3.3 Throttle Control Lever
3.4 Choke Push-Pull Control
3.5 Hour Meter
3.6 Joystick Drive Control Lever
3.7 Twin Stick Drive Control Lever

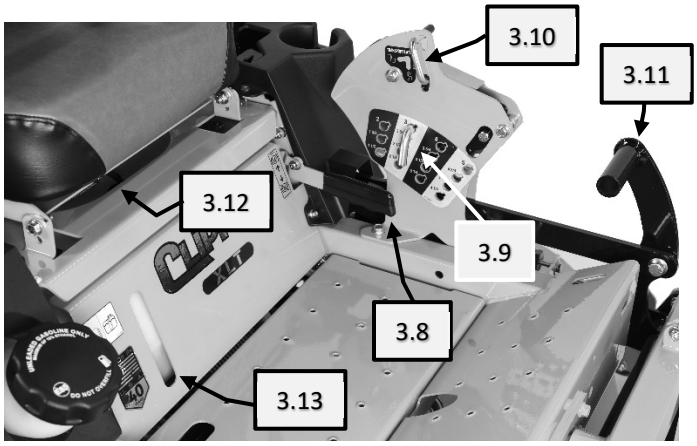

3.8 Parking Brake Lever
3.9 Cut Height Plate & Pin
3.10 Transport Latch
3.11 Cut Height Foot Pedal
3.12 Seat Slide Lever
3.13 Graduated Sight Gauge

Control Descriptions

3.1 **Ignition Switch:** A four-position switch: “Off”, “Run + Accessory”, “Run”, and “Start”. With key inserted, rotate clockwise to the “Start” position, release key when engine starts. The switch will automatically return to the “Run” position. If unit is equipped with a 12-volt accessory (i.e. Light Kit or similar) connected to the key switch; turn the key counterclockwise to the “Run + Accessory” position to power the accessory. Turn switch to “Off” position to shutoff engine and any 12-volt accessory connected to the key switch.

3.2 **Blade Engagement Switch:** This is a two-position switch: pull switch up to engage the mower blades, push switch down to disengage the mower blades.

3.3 **Throttle Control Lever:** Connected to the engine throttle control by a cable. Move the throttle lever generally forward to increase engine rpm and rearward to decrease engine rpm.

3.4 **Choke Push-Pull Control:** Connected to the engine choke control by a cable. Pull the choke knob up to assist starting a cold engine. Push knob down after engine has started.

3.5 **Hour Meter:** The hour meter records accumulative time while the engine is running.

3.6 **Joystick Drive Control Lever:** Connected to the drive transaxles to translate the control lever movement to forward, reverse, and turning motion of the mower.

3.7 **Twin Stick Drive Control Levers:** Connected to the respective drive transaxle for each side to translate the control lever movement to forward, reverse, and turning motion of the mower.

3.8 **Parking Brake Lever:** When the lever is pulled up the brake is applied on both transaxles. Push down to release.

3.9 **Cut Height Selector Plate & Pin:** Used to set the cut height of the deck.

3.10 **Transport Release Latch:** Used to engage or bypass the deck transport position.

3.11 **Cut Height Foot Pedal:** Used to raise and lower the cutting deck.

3.12 **Seat Slide Lever:** Used to adjust the seat fore or aft for comfort.

3.13 **Graduated Sight Gauge:** Visually Indicates the fuel fill level.

Control Decals

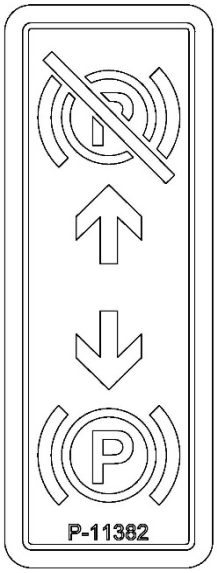

P- 11382… Brake “ON” / “OFF” Position.

P-13437… Transport Latch – Lock position will permit the deck to lock in transport when raised to that position. Un-lock position will not lock the deck in transport when raised in transport.

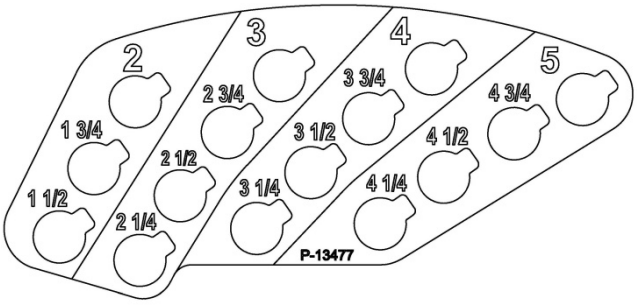

P-13477… Deck Height Position – Used as a relative reference of the cutting blade height above the ground surface.

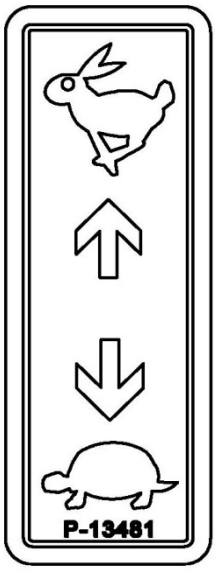

P-13481… Throttle Control Position, Idle RPM to Full Throttle

Section 4... Start Up & Operation

	Warning
	Never allow untrained people or children to operate the mower. Do not operate the mower with faulty, missing or maladjusted components. Clear area of debris and obstacles and stay alert to changing conditions that can impact the mower operation.

	Danger
	ENGINE SHOULD BE OFF AND COOL BEFORE REFUELING. USE APPROVED GAS CONTAINER. NEVER FILL TANK INDOORS. NEVER OVER FILL THE FUEL TANK. CLEAN UP ANY SPILLS. REPLACE CAP AND SECURE TIGHTLY.

	Danger
	AVOID INHALING EXHAUST FUMES -- CARBON MONOXIDE GAS IS COLORLESS AND ODORLESS, AND CAN CAUSE UNCONSCIOUSNESS, AND IS POTENTIALLY LETHAL. DO NOT RUN LAWN MOWER IN GARAGE OR OTHER CONFINED AREAS.

	Danger
	TO AVOID PERSONAL INJURY OR PROPERTY DAMAGE, USE EXTREME CARE IN HANDLING FUEL. FUEL IS EXTREMELY FLAMMABLE AND THE VAPORS ARE EXPLOSIVE. KEEP FUEL AWAY FROM IGNITION SOURCES.

	Warning
	Wear the appropriate Personal Protective Equipment (PPE) when operating and/or servicing the mower. It is required that the operator or servicing personnel wear protective eye wear, hearing protection, hand protection and/or foot protection.

PRE- OPERATION CHECKLIST

	Fuel	Fill fuel tank to appropriate level with fresh, clean unleaded fuel. Consult Engine Owner's Manual for fuel recommendations.
	Engine Oil Level	Consult Engine Owner's Manual for proper procedure.
	Engine Air Filter	Consult Engine Owner's Manual for proper procedure.
	Engine	Clear any debris from engine, check for loose hardware, and/ or leaks.
	Hydraulic Transaxle Drive Oil	Check oil level.
	Mower Deck	Clean debris & grass as necessary from top and bottom of deck.
	Blades	Check condition of blades. Make sure blades are securely fastened. Sharpen as required.
	Tires (Recommended 12 PSI/82kPa)	Check Tire Pressure (10 to 16 PSI / 69 to 110 kPa, Front & Rear).
	Belts	Check belts for wear and proper alignment.
	General	Check for loose hardware, missing components, and/or leaks.
	Safety	Check Operator Presence Control System (See Section 2 Safety Interlock System) and missing or damaged safety shields or guards.
	ROPS	ROPS in the locked upright position. Hardware securing ROPS and the Seat Belt is secure. Use Seat Belt when in use.

Starting The Engine

4.1 The mower's Safety Interlock System is designed to protect the operator and bystanders from accidental injury due to unintentional engine starting and/or the operator leaving the operator zone. The engine starter will not engage until the operator satisfies the following conditions:

4.1.1 Steering Drive Control Lever(s) are in the neutral lock position.

4.1.2 Parking Brake is set. (Brake Lever Pulled Up)

4.1.3 Deck Blade Engagement Switch is in the "Off" position. (Pushed Down)

	Danger
	THE SAFETY INTERLOCK SYSTEM MUST NOT BE DISCONNECTED OR BYPASSED. UNEXPECTED OPERATION COULD OCCUR RESULTING IN PERSONAL INJURY OR DEATH.

4.1.4 NOTE: The operator's seat has a safety switch integrated into the seat cushion. The switch is activated by the weight of the operator. Should the operator become unseated, for any reason, when the Drive Control Lever(s) is/are in the drive position and/or the Blade Engagement Switch is "ON" the engine will stop.

4.1.5 NOTE: The following steps are the correct procedure for starting the engine. Contact your Country Clipper Dealer if difficulty is encountered.

4.1.6 Prior to starting the mower for the day perform the Pre-Operation Check List.

4.1.7 Make sure Drive Control Lever(s) are in the Neutral lock position and the Deck Blade Engagement is in the "Off" position (Pushed Down). Only start the engine from the operator's position. Additionally, the Parking Brake must be set (Pulled Up) before starting.

4.1.8 Pull up on the engine Choke Knob, when engine is cold or a warm engine fails to start within 5 secs. To avoid flooding the engine once started, push the Choke Knob to the off position.

4.1.9 Position Throttle Control Lever to mid-range.

4.1.10 Insert Key into Ignition Switch. Rotate Key clockwise to the "Start" position, release key when engine starts. The Ignition Switch will automatically return to the "Run" position. If unit is equipped with a 12-volt accessory (i.e. Light Kit or similar) connected to the Ignition Switch; turn the Key counterclockwise to the "Run + Accessory" position to power the accessory.

4.1.11 **Perform Safety Interlock System check...** (See Section 2 Safety Interlock System)

	Important
	Do not run the electric starter continuously for more than 5 seconds; otherwise, the battery may discharge quickly. If the engine does not start right away, wait 15 seconds and try again.

4.1.12 Allow the engine to idle a few minutes before advancing to full throttle and/or activating the mower blade engagement.

	Warning
	Uncontrolled movement when the Drive Control Lever(s) are in the Neutral Lock position can result in serious injury or death. If the mower moves with the Drive Control Lever(s) in the Neutral Lock position while the engine is running and the Parking Brake is released, immediately turn the ignition switch to "OFF" and set the Parking Brake. The Drive Control Neutral Lock position and /or the Transmission Linkages require adjustment as outlined in the Maintenance section or by contacting your Country Clipper Dealer.

Stopping The Engine

4.2 The following steps are the correct procedure for stopping the engine.

4.2.1 Move the drive control lever(s) to the neutral lock position.

4.2.2 Throttle the engine back to ½ throttle and turn "Off" the Deck Blade Engagement switch.

4.2.3 Move the throttle to idle and allow the engine to run at idle for a couple of minutes to cool down.

4.2.4 Turn Ignition Switch to "Off" position to shut off engine and any 12-volt accessory connected to the key switch. Set the Park Brake. Remove key from Ignition Switch before leaving the mower.

	Warning
	When leaving the mower unattended, always remove the Ignition Key and set the Park Brake, even if for just a few moments. This will discourage unauthorized personnel from operating the mower.

	Caution
	The mower is equipped with a blade brake that will stop the mower cutting blades within 7 seconds from when they are turned off or if the operator leaves the seat when they are engaged. If mower cutting blades continue to rotate longer than 7 seconds, adjustment is required. Contact your Country Clipper Dealer for proper adjustment.

Roll Over Protection Structure (ROPS) - ** If equipped **

4.3 Proper use of the ROPS along with the seat belt is effective in reducing injuries in the event of an overturn accident. Overturning the unit with the ROPS lowered or removed can result in serious injury or death.

	Warning
	The seat belt must be worn on mowers equipped with a factory certified Roll Over Protection Structure (ROPS) during operation. Failure to do so will reduce or eliminate protection for the operator in the event of a roll-over.

	Warning
	Factory certified Roll Over Protection Structure (ROPS) meets industry or government standards. Any damage or alteration to the ROPS, mounting hardware, or seat belt voids the certification and will reduce or eliminate protection for the operator in the event of a roll-over. The ROPS, mounting hardware, (proper torque – see table) and seat belt should be checked after the first 100 hours and 500 hours thereafter for any evidence of damage, wear, or cracking. In the event of damage or alteration the ROPS must be replaced prior to further operation of the vehicle.

	Warning
	All labels, caution decals, ROPS certification data, etc. must be kept intact and legible at all times.

ROPS Hardware Torque Table	
Inch Fasteners	**Grade 5 lb.-ft**
½ - 13	**57**

4.3.1 The two-post ROPS can be folded down by removing the Cotter Pins and pulling out the T-Handle Clevis Pins. This should only be done to operate the mower under low hanging tree limbs or other obstructions. Additionally, this may be required when loading the mower in an enclosed trailer.

NOTE: Minimize the chance of injury or death from a rollover incident by:

	Warning
	Substitution of mounting hardware, seat belt, etc., with components not equal or superior to the original certified components will void the certification and will reduce or eliminate protection for the operator in the event of a roll-over.

	Warning
	Use of the ROPS in the “folded” position should only be when absolutely necessary. Do not use the seat belt if the ROPS is not in the up position.

	Important
	Contact of an overhead obstruction with the ROPS can cause the mower to tip backwards. Make sure adequate overhead clearance is obtained before operating.

4.3.2 Keep ROPS in the locked upright position and wear the seat belt.
4.3.3 Always use the ROPS on slopes along with the seat belt. Review Section 2 Slope Operation for instruction and warnings.
4.3.4 Only lower the ROPS when absolutely necessary due to overhead obstructions.
4.3.5 Do not wear seat belt when the ROPS is in the folded position.
4.3.6 Inspect the area prior to mowing for adequate overhead clearance.
4.3.7 Inspect seat belt on a daily basis, including the mounting hardware to the seat. Replace seat belt if worn, damaged or defective. Replace if any of the components indicate these signs:
- 4.3.8 Cuts or fraying.
- 4.3.9 Extreme or unusual wear.
- 4.3.10 Webbing weakening due to UV exposure.
- 4.3.11 Damage to the buckle, latch plate or hardware.
- 4.3.12 Any other problems.

4.3.13 In the event of a roll-over or other damage to the ROPS, the ROPS must be replaced to retain the best protection.

	Warning
	Structural damage, alteration, or overturn can impair the protective capability of the ROPS. Do not remove or alter the ROPS components. Do not attempt to weld or straighten the ROPS. Failure to adhere to these instructions could result in severe injury or death.

4.3.14 Inspect the ROPS after the first 100 hours of operation. After the initial inspection, inspect the ROPS every 500 hours after that.

Mower Driving Operation

4.4 Country Clipper offers two types of steering options; Joystick Drive Control and Twin Stick Drive Control. Both options will be explained below.

	Danger
	NEVER MAKE SUDDEN STOPS OR REVERSE IN DIRECTION, ESPECIALLY WHEN OPERATING ON A SLOPE. SPEED AND/OR DIRECTION OF TRAVEL ARE AFFECTED INSTANTLY BY MOVEMENT OF DRIVE CONTROL LEVER(S). AVOID RAPID CHANGE OF DIRECTION AND STROKE OF THE DRIVE CONTROL LEVER(S) IN EITHER DIRECTION. SUDDEN CHANGES IN SPEED AND DIRECTION COULD RESULT IN SERIOUS INJURY OR DEATH.

	Important
	Until the operator is familiar with their Country Clipper Zero Turning Radius Mower, they should follow these recommendations: Disengage the mower blades. Go very slowly (throttle engine rpm down to ½ throttle or less) until thoroughly familiar with the machine. Keep away from fences, buildings, and other obstructions. Move the Control Lever(s) smoothly and slowly. Practice until operation is smooth and efficient. The drive control lever(s) are more responsive at full throttle engine rpm.

4.4.1 **Joystick Drive Control Operation** (Section 4, Figure 1)

4.4.2 With the engine started, release the parking brake. (Push Park Brake lever down to release)

4.4.3 Lift the Joystick Drive Control Lever up out of the neutral lock position. (Pull Joystick straight up)

4.4.4 **Travel Forward...** Move the Joystick Drive Control Lever forward to move forward. Increasing the forward travel of the Joystick Drive Control Lever will increase the speed of travel.

4.4.5 **Travel Reverse…** Move the Joystick Drive Control Lever rearward to move in reverse. Increasing the rearward travel of the Joystick Drive Control Lever will increase the speed of travel.

4.4.6 **Turn Left…** Move the Joystick Drive Control Lever to the left. Increasing the leftward travel of the Joystick Drive Control Lever will increase the speed of travel to the left.

4.4.7 **Turn Right…** Move the Joystick Drive Control Lever to the right. Increasing the rightward travel of the Joystick Drive Control Lever will increase the speed of travel to the right.

4.4.8 **Zero Radius Turn…** Move the Joystick Drive Control Lever to the side you wish to turn and slightly rearward at the same time. Increasing the travel of the Joystick Drive Control Lever will increase the speed of travel.

4.4.9 **Stop or Decrease Travel Speed…** Move the Joystick Drive Control Lever in the opposite direction of travel. To stop, move Joystick Drive Control Lever to the neutral position.

4.4.10 **Stop and Park…** With the Joystick Drive Control Lever in the neutral position, press the Joystick Drive Control Lever down to the Neutral Lock position.

4.4.11 **Twin Stick Drive Control Operation** (Section 4, Figure2)

4.4.12 With the engine started, release the parking brake. (Push Park Brake lever down to release)

4.4.13 Move the Twin Stick Drive Control Levers inward to the neutral position. (Pull both levers inward from the neutral lock position)

4.4.14 **Travel Forward...** Move the Twin Stick Drive Control Levers forward to move forward. Increasing the forward travel of the Twin Stick Drive Control Levers will increase the speed of travel.

4.4.15 **Travel Reverse…** Move the Twin Stick Drive Control Levers rearward to move in reverse. Increasing the rearward travel of the Twin Stick Drive Control Levers will increase the speed of travel.

4.4.16 **Turn Left…** Move the Right Steering Drive Control Lever slightly ahead of the Left Steering Drive Control Lever. Increasing the distance between the two Drive Control Levers will increase the speed of travel to the left.

4.4.17 **Turn Right…** Move the Left Steering Drive Control Lever slightly ahead of the Right Steering Drive Control Lever. Increasing the distance between the two Drive Control Levers will increase the speed of travel to the right.

4.4.18 **Zero Radius Turn…** Move one Steering Drive Control Lever forward and one Steering Drive Control Lever rearward. Left Zero Turn – Move Right Steering Drive Control Lever forward and Left Steering Drive Control Lever rearward. Right Zero Turn - Move Left Steering Drive Control Lever forward and Right Steering Drive Control Lever rearward.

4.4.19 **Stop or Decrease Travel Speed…** Move the Twin Stick Drive Control Levers in the opposite direction of travel. To stop, move both Twin Stick Drive Control Levers to the neutral position.

4.4.20 **Stop and Park…** With the Twin Stick Drive Control Levers in the neutral position, push the Drive Levers outward to the Neutral Lock position.

	Warning
⚠	In case of steering control loss during operation of the mower; immediately shut off the Ignition Switch, shut off the Blade Engagement Switch, place the Drive Control Lever(s) in the Neutral Lock position, set the Parking Brake, and remove the key. Inspect the mower and contact your Country Clipper dealer to resolve the issue before continuing the operation.

Deck Cut Height Adjustment

4.5 The Deck Cut Height adjustment is adjustable in ¼ inch increments from 1 ½ to 5 inches to achieve your desired cut height. The Transport Latch is a two-position latch; in the Lock position the deck will lock in the transport position when raised with the Cut Height Foot Pedal, in the Un-Lock position the deck will not lock in the transport position when raised to the transport position by the Cut Height Foot Pedal.

4.5.1 **Transport Latch in Lock Position…**With the deck locked in the transport position insert the Cut Height Pin to the desired height. Press the Cut Height Foot Pedal to lift the deck then lift the Transport Latch straight up and slowly allow the deck to lower until the weight of the deck is supported by the Cut Height Pin. Release the Transport Latch back to the Lock position. The next time the deck is raised to the transport position it will lock in place.

4.5.2 **Transport Latch in Un-Lock Position…** In the un-lock position, the deck won't latch in the transport position. To change the cut height, press the Cut Height Foot Pedal to lift the deck. While holding the deck up insert the Cut Height Pin to the desired height. Slowly allow the deck to lower until the weight of the deck is supported by the Cut Height Pin.

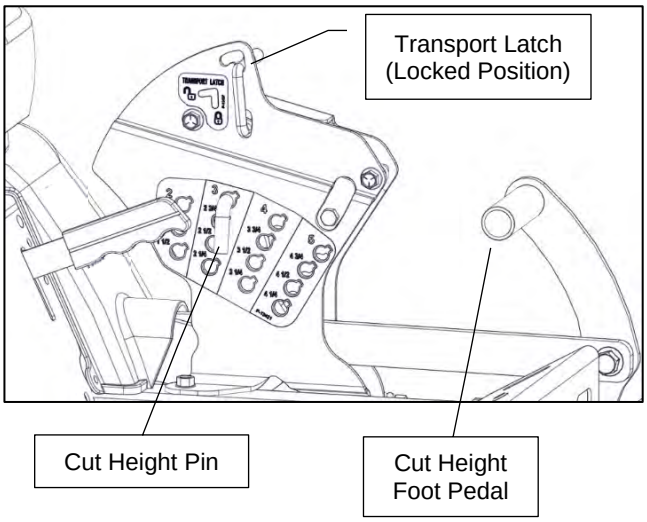

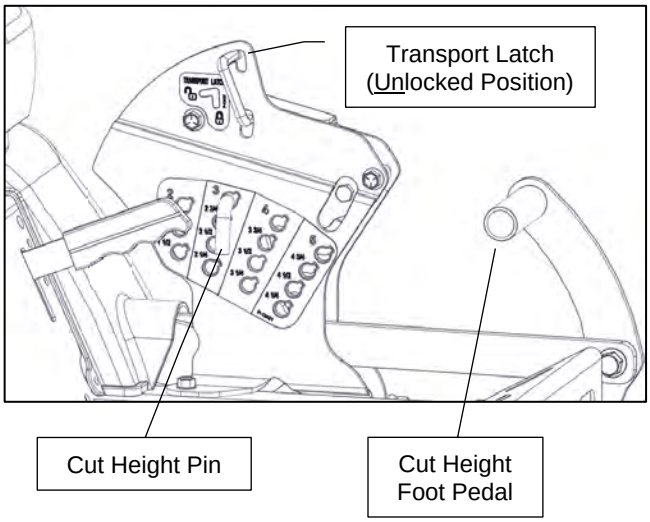

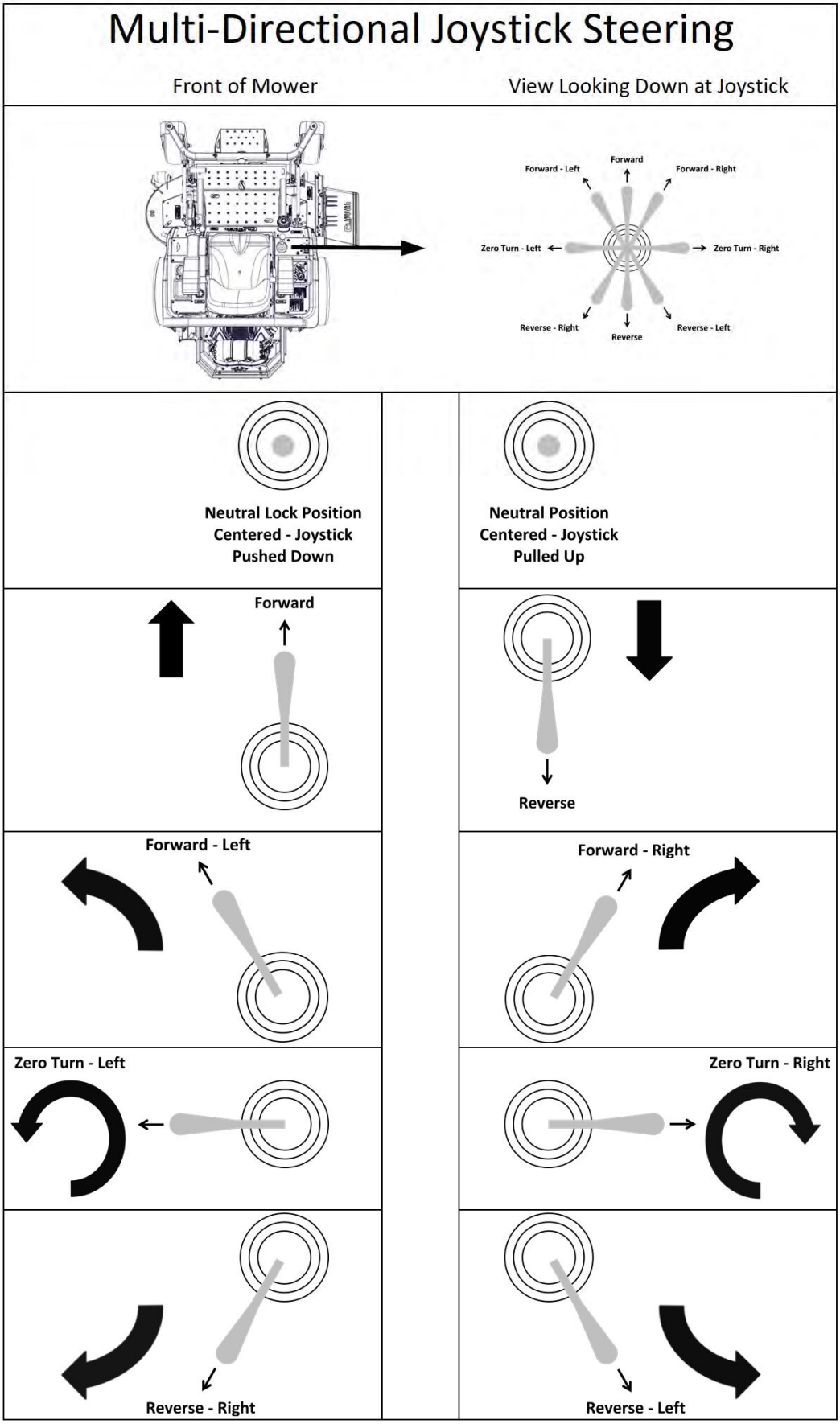

Section 4, Figure 1

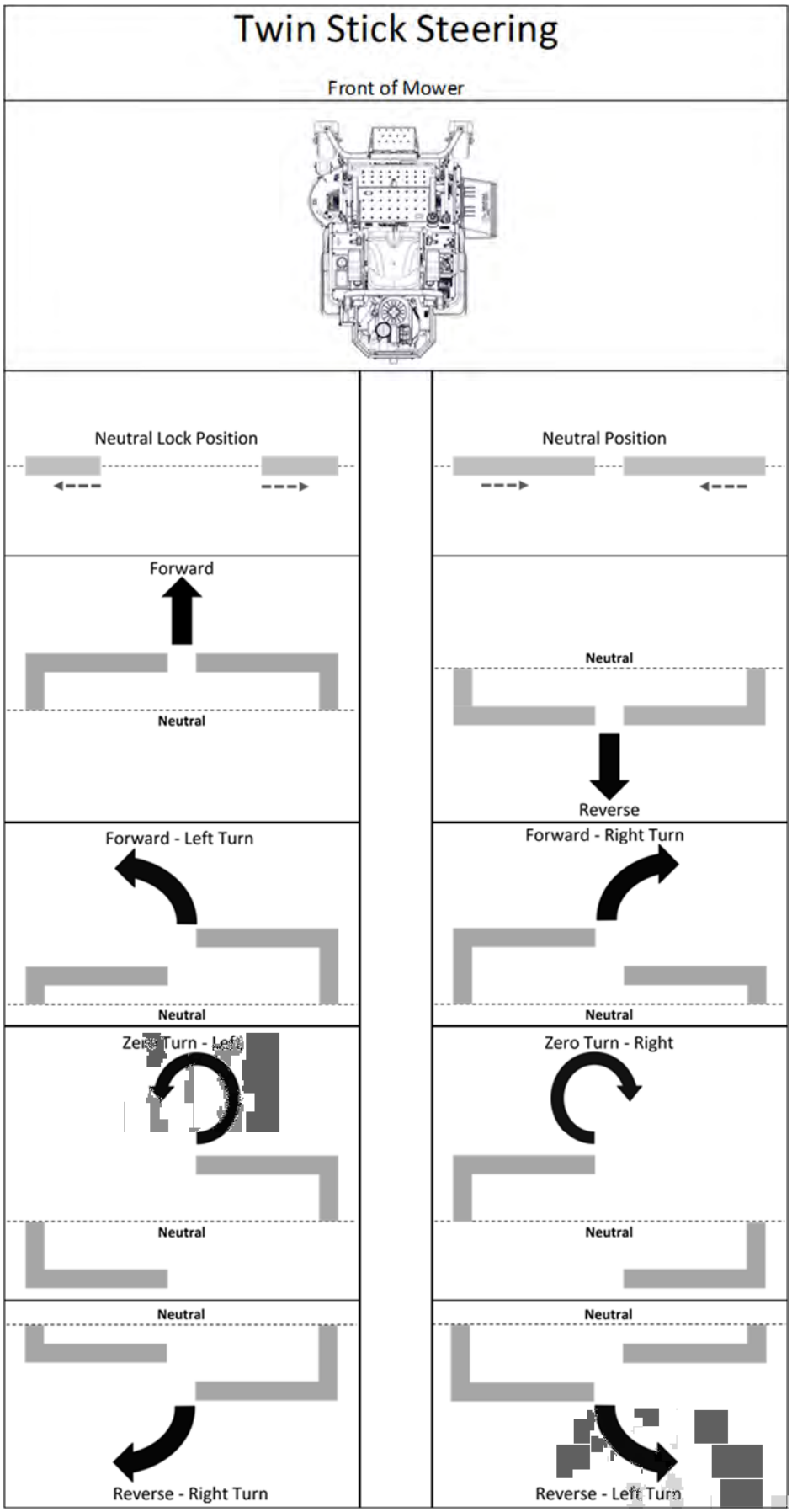

Section 4, Figure 2

Blade Engagement

	Danger
	KEEP HANDS AND FEET AWAY FROM ROTATING PARTS OR UNDER THE MACHINE. KEEP CLEAR OF THE DECK DISCHARGE AREA AND/OR BLADES WHILE OPERATING. DISENGAGE BLADES AND SHUT THE ENGINE OFF IF ANYONE ENTERS THE AREA.

	Danger
	NEVER OPERATE THE MACHINE WITHOUT THE DISCHARGE CHUTE, GRASS CATCHER, OR OTHER SAFETY DEVICES IN PLACE AND FUNCTIONING PROPERLY. NEVER DIRECT MOWER DISCHARGE TOWARD PEOPLE, ANIMALS OR OTHER OBSTRUCTIONS.

	Warning
	Disengage blades when not mowing. Shut off the engine and wait for all rotating parts to stop prior to cleaning, inspecting, servicing, removing grass catcher, and/or unclogging the discharge chute.

	Important
	Before initial use, the blade engagement clutch must be broken-in as follows: With engine at full RPM, engage deck until mower blades come to full speed and then disengage until mower blades come to a complete stop. Repeat 10 times to seat clutch properly.

4.6 The Blade Engagement Switch is a two-position switch: Pull up to engage the Electric Clutch that drives the deck blades, push down to disengage the Electric Clutch. To maximize the life of the Electric Clutch, follow these guidelines:

4.6.1 Only engage the clutch with the throttle at approximately 1/2 to 2/3 throttle and no load on the deck blades. Allow the blades to come up to speed and move the throttle lever to full throttle prior to cutting grass. Avoid engaging the clutch when the deck is under heavy load (ex. tall grass, deck is plugged) Excessive loading can cause the belt(s) and/or Electric Clutch to slip, resulting in premature wear or possible damage.

4.6.2 Disengage the Electric Clutch only when the throttle is set at less than ½ throttle. Never disengage the clutch with the engine running at full throttle. Disengaging the clutch at a higher rpm could reduce the life of the clutch.

Mowing Recommendations

4.7 Prior to operating the mower, make sure you are thoroughly familiar with the proper use and operation of the equipment. The operator should read this manual completely and attempt slow moving maneuvering to become familiar with the operation of the mower before attempting normal speed operation.

4.7.1 **Oversteering…** Inexperienced operators may tend to oversteer and lose control. Practice steering maneuvers on a flat open area at low speed (Engine at ½ throttle or less) to become familiar with the steering characteristics of the mower before attempting full throttle operation.

4.7.2 **Turning on Turf…** Avoid turf damage by keeping both wheels rolling either forward or reverse when turning. Turning or pivoting on one stopped wheel can damage turf, especially if the ground is soft due to excess moisture.

4.7.3 **Mower Performance…** Your mower is designed for optimal performance when the engine is set at full throttle (Full RPM). The engine rpm directly controls the blade tip and drive wheel speeds. The best cut quality is normally achieved at the highest blade tip speed. Additionally, this gives maximum power to the drive wheels when needed. The drive control lever(s) should be used to control travel speed rather than engine rpm.

4.7.4 **Travel Speed…** Vary ground speed of mower to suite the turf conditions and terrain during the year. (i.e. slowdown in tall thick grass, on slopes, wet conditions, rough terrain etc.)

4.7.5 **Normal Mowing…** It is recommended to cut off only 1/3 of the grass blade to maintain a healthy lawn. When mowing an area for the first time it is recommended to cut the turf slightly higher to avoid scalping uneven terrain and to avoid unseen obstacles in the lawn. If the grass is taller than 6 inches it may require mowing twice to get the desired quality of cut.

4.7.6 **Turf Growth Rate…** Turf grows at different rates during the seasonal growing period. Turf usually experiences the greatest growth rate from early Spring to the start of Summer. During this period the grass may require more frequent mowing to maintain the desired appearance. As you move into Mid-Summer, less frequent mowing may be required. If regular mowing intervals cannot be maintained; mow at a higher cut height and then come back a couple days later and mow at the desired cut height.

4.7.7 **Alternate Cutting Direction…** Always alternate the mowing pattern to keep grass blades growing straight and to disperse grass clippings evenly throughout the lawn.

4.7.8 **Keep Blades Sharp…** Dull blades and improperly sharpened blades can cause cut quality issues. See Mower Blade Service for information and details on the proper maintenance of blades.

	Warning
⚠	Never work with blades while engine is running and/or blade engagement switch is in the “on” position. Mower blades are sharp. Wear gloves or wrap the blade before handling and servicing them.

Transmission Free Wheel Release

4.8 If the mower drive becomes inoperable, the mower can be moved by releasing the “Bypass Valve” on both transmissions which will allow the mower to free wheel. Bypassing the transmissions permits moving the mower for a short distance at a maximum of 2 mph (3.2 Km/h) without starting the engine.

4.8.1 The Bypass Actuator can be located under the main frame inside the rear of each tire at the back of the mower. Activate by pulling the Bypass Actuator tab rearward and then move the tab to the center of the mower to lock in place via the notch in the tab. Both transmissions must be bypassed to move the mower. Deactivate by moving the Bypass Actuator tab outward and pushing forward back to the normal run position.

	Warning
⚠	Allow mower to cool before releasing the Bypass Valves for service.

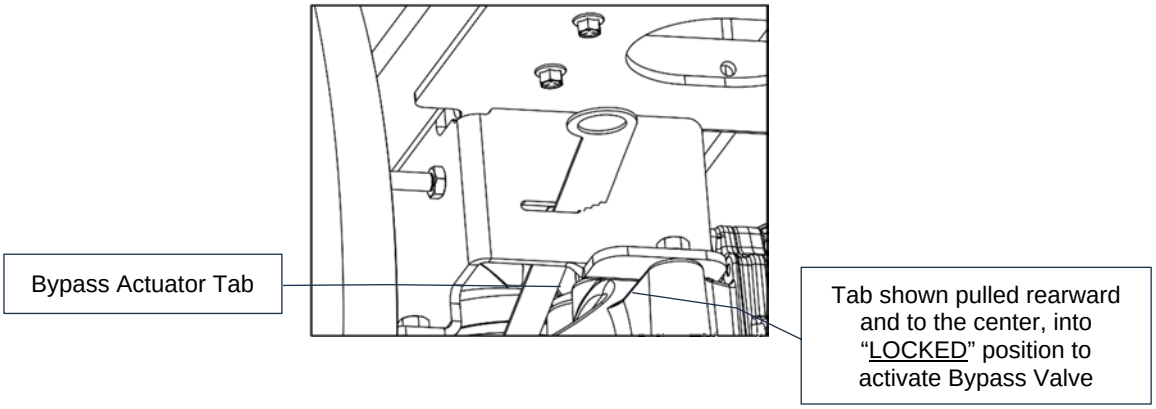

Left Side Transmission

Mower Transportation

4.9 When transporting the mower from one location to another via a transport vehicle, follow the proceeding guidelines.

4.9.1 **Raise Deck and Latch in Transport…** Depress the cut height foot pedal to raise the deck into transport position and secure the transport latch into the lock position.

	Warning
	Caution should be exercised when loading and unloading a mower on a trailer or transport vehicle. Depending on the trailer or transport vehicle; the ramp slope could cause loss of control or tip over. Use full width ramps for loading and unloading a machine for transport.

4.9.2 **Load on Transport Vehicle…** Throttle the engine back to approximately ½ throttle and proceed up the loading ramp with caution.

4.9.3 **Set Park Brake…** Position the mower on the transport vehicle, set the Parking Brake, and shut the engine off.

4.9.4 **Tie Down Mower…** It is recommended that you tie down the rear and the front of the mower to the transport vehicle.

Mower Storage

4.10 When storing the mower at the end of a mowing season, the mower, engine, and battery should have the following service before being stored.

4.10.1 **Clean Mower…** Remove grass, dirt, and debris from the mower and cutting deck. Important: Do not pressure wash the mower, especially near the control panel, engine, and/or components with bearing seals. Allow the mower to cool for 15 to 30 minutes prior to washing. Wash with a mild detergent and tap water. Avoid excessive water usage.

4.10.2 **Dry Mower…** Allow mower to dry completely before storing.

4.10.3 **Paint…** Touch up paint as necessary.

4.10.4 **Inspect Mower…** Inspect mower for any loose, worn, or damaged components. Tighten, replace, or repair as required. Contact your Country Clipper dealer for parts, assistance, or to schedule a service appointment.

4.10.5 **Service Mower…** Thoroughly lubricate and service per maintenance schedule, Section 5.

4.10.6 **Fuel…** Drain fuel from fuel tank and run engine until it stops due to lack of fuel.

4.10.7 **Battery…** Remove battery from the mower, clean terminals, and cable connectors. Charge the battery if necessary. Store the battery in a cool dry place. Keep the battery fully charged to prevent battery damage when the temperature is below 32°F (0°C).

	Warning
	Charge battery in a well-ventilated area; away from ignition sources. When connecting and disconnecting the charger to the battery, unplug the charger from the outlet.

4.10.8 **Storage…** Store the mower in a clean dry place.

Preseason Mower Prep

4.11 When preparing the mower for a new season, reinstall the battery and perform the Pre-Operation Checklist at the beginning of this section or contact your Country Clipper Dealer to schedule a pre-season service appointment.

Mower Towing

4.12 The mower is equipped with a single hole Hitch Plate.

4.12.1 **Max Pulling Weight…** The recommended maximum pulling capacity is 200 lbs.

4.12.2 **Max Tongue Weight…** The recommended maximum tongue weight is 35 lbs.

	Warning
	Use extreme caution when towing on slopes; additional weight may cause loss of traction and control. Minimize travel speed to assist in maintaining control of towed implement.

	Warning
	Do not attempt a zero-turn with a towed implement.

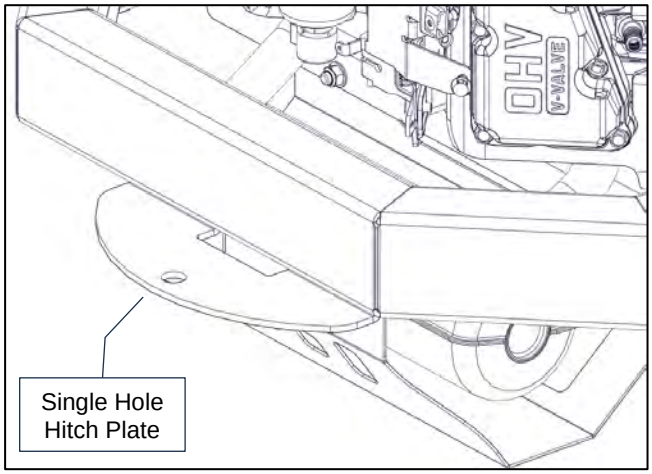

Section 5... Maintenance

Warning

Observe all common shop safety practices when inspecting, servicing, and repairing equipment. Use of the appropriate Personnel Protective Equipment (PPE) is required.

Important

This listed maintenance schedule is a general minimum guideline. If mower isn't functioning as intended, perform necessary maintenance or repairs. Contact a Country Clipper Dealer as necessary.

Maintenance Schedule

Maintenance	Each Use	First 5 Hours	First 100 Hours	Every 50 Hours or Annually*	Every 100 Hours or Annually*	Every 400 Hours	Service Section Pg.
Check Engine Oil Level	●						Engine Owner Manual
Check Engine Air Filter	●						Engine Owner Manual
Service Engine		●			●		Engine Owner Manual
Check Condition of Mower Blades (Sharpen as Required)	♦						Mower Blade Service, 5.10
Check Tire Pressure (Recommended 12 Psi/ 83 kPa, Ft & Rr)	♦						Tires, 5.5
Check Belts for Wear and Proper Alignment	♦						Belts, 5.6
Check for Fuel & Oil Leakage	♦						Maintenance, 5.2
Clean Debris & Grass from Mower (Clean as Necessary)	♦						Mower Storage, 4.12
Check for Loose Hardware (Tighten as Required)	♦						Maintenance, 5.2
Check Operator Presence Control System	♦						Safety Interlock System, 2.4
Check Transmission Linkages and Neutral Lock Adjustment	♦						Maintenance, 5.14
Caster Brake Adjustment and Service		♦			♦		Maintenance, 5.5
Grease Deck Jack Lift (If equipped)		♦		♦			Grease Points, 5.4
Grease Front Caster Wheels		♦		♦			
Check Wheel Lug Nuts (75 ft/lbs. or 102 Nm)		♦		♦			Tires, 5.5
Change Hydraulic Transaxle Drive Oil & Filter			♦			♦	Hydraulic Drive Service, 5.12
Check Hydraulic Transaxle Drive Oil Level		♦		♦			
Check Engine Rpm (3400 ± 100)				♦			Dealer
Check Deck Level					♦		Deck Leveling Adj., 5.18
Roll Over Protection Structure (ROPS)					♦		ROPS, 2.4 & 4.3

∗ Maintenance by hours or annually, whichever occurs first.

• See engine owner's manual for specific manufacture recommendations for service requirements and frequency. (Increase Service Frequency under sever operating conditions.)

Contact your **Country Clipper Dealer** for service assistance or to schedule maintenance with the dealer.

Danger

SHUT OFF THE ENGINE AND WAIT FOR ALL ROTATING PARTS TO STOP. ROTATING PARTS CAN CAUSE SEVERE INJURY OR DEATH.

Danger

ENGINE EXHUAST GASES CONTAIN POISONOUS CARBON MONOXIDE. CARBON MONOXIDE IS ODERLESS, COLORLESS, AND CAN CAUSE DEATH IF INHALED.

	Danger
	GASOLINE IS EXTREMELY FLAMMABLE AND ITS VAPORS CAN EXPLODE IF IGNITED. STORE GASOLINE ONLY IN APPROVED CONTAINERS, IN WELL VENTILATED, UNOCCUPIED BUILDINGS, AND AWAY FROM SPARKS OR FLAMES. SPILLED FUEL COULD IGNITE IF IT COMES IN CONTACT WITH HOT PARTS OR SPARKS FROM IGNITION.

	Caution
	When performing maintenance or service operations that require raising the mower off the ground or removing the tires, DO NOT rely entirely on a hydraulic or mechanical Jack to support the mower. Always use appropriately sized and positioned Jack Stands or equivalent supports.

Maintenance Introduction

Regular maintenance is the best method to avoid costly downtime, expenses, and premature repair. Following the service recommendations and intervals, on a routine basis, will help maintain your mower at its optimum performance.

When operating, remain alert for unusual noises which could signal a problem. Visually inspect the mower for any abnormal wear, loose hardware, leaks, or damage. The best time to detect potential issues is while performing scheduled maintenance service.

Keep the mower clear of heavy build-up of grease, oil, and debris, especially in the engine compartment and under the seat platform areas. Inspect daily for grass clippings, wire, and/or string tangles. The underside of the mower deck will collect a build-up of grass clippings and dirt, especially when grass is wet or has high moisture content. This build-up will harden, restricting blade and air movement and will probably show a poorer quality of cutting. Routine removal of this build up is crucial for optimal mower performance. Some repairs will require assistance from a trained service mechanic and should not be attempted by unskilled personnel. Contact your Authorized Country Clipper Dealer when assistance is needed or to schedule maintenance at the dealership.

	Warning
	Never allow untrained people to perform maintenance or service on the mower.

	Danger
	HOT PARTS CAN CAUSE SEVERE BURNS. DO NOT TOUCH ENGINE WHILE OPERATING OR JUST AFTER STOPPING. NEVER OPERATE WITH HEAT SHIELDS OR GUARDS REMOVED.

	Danger
	HIGH PRESSURE FLUIDS CAN PUNCTURE SKIN AND CAUSE SEVERE INJURY OR DEATH. DO NOT WORK ON HIGH PRESURE FUEL SYSTEM WITHOUT PROPER TRAINING AND SAFETY EQUIPMENT. FLUID PUNCTURE INJURIES CAN BE HIGHLY TOXIC AND HAZARDOUS. SEEK MEDICAL CARE IF AN INJURY OCCURS.

	Danger
	DISCONNECT AND GROUND SPARK PLUG LEADS AND DISCONNECT NEGATIVE BATTERY LEAD PRIOR TO CLEANING, INSPECTING, AND/OR SERVICING. ACCIDENTAL STARTS CAN CAUSE SEVERE INJURY.

	Warning
	Electrical shock can cause injury. Do not touch wires while engine is running.

	Warning
	Wear the appropriate Personal Protective Equipment (PPE) when servicing the mower. It is required that the servicing personnel wear protective eyewear, hearing protection, hand protection and foot protection.

Engine Maintenance

5.1 **Check Engine Oil** daily or after every 4 hours of use. Refer to the manufacture's engine manual for the maintenance schedule, oil recommendations, and capacity. **IMPORTANT**: Change engine oil and filter within the first 5 hours of operation and thereafter per the engine manufacture's recommendations.

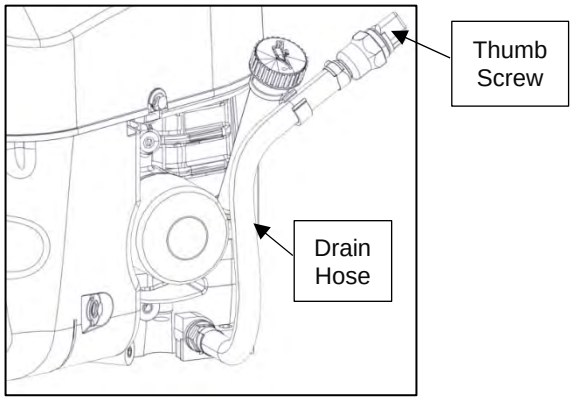

Stowed Drain Hose

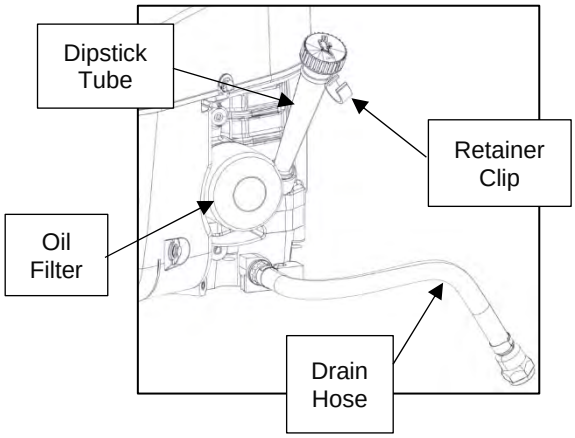

Changing Oil

5.1.1 **Oil Drain Hose…** Locate the stowed oil drain hose on the right side of the engine, then remove it from the retainer clip.

5.1.2 **Oil Container…** Position the end of the drain hose over an oil collection container.

5.1.3 **Thumb Screw…** Turn the thumb screw counterclockwise and remove it from the oil drain hose. Make sure to initially hold the oil drain hose securely to prevent it from turning, then allow the oil to drain for 10 min. to adequately remove oil.

5.1.4 **Oil Filter…** Remove the oil filter, located near the dipstick tube.

5.1.5 **Close Drain & Install Filter…** After the oil has drained, reattach the thumb screw to the drain hose by turning it clockwise to close. Install a new oil filter. Reattach the drain hose to the retainer clip.

5.1.6 **Clean Up…** Clean up any spills or drips and remove the used oil collection container.

5.1.7 **Refill Engine Crankcase…** Refill per the manufacture's recommendations.

5.1.8 **Check Work…** Make sure that the oil drain hose is securely attached to the retainer clip, the thumb screw is completely closed and the oil filter and dipstick are secure.

Other Maintenance

5.1.9 **Air Filter…** Check the engine air filter before each use. Examine for dirt and debris build-up on the filter. Replace as required. Follow the engine manufacture's recommendations.

5.1.10 **Remove Air Filter…** Remove air cleaner cover and filter element from mower.

5.1.11 **Install Filter…** Install a new filter and reinstall the air cleaner cover. Check to make sure the air cleaner cover sealed and is secure.

5.1.12 **Check Air Cleaner Assembly…** Check all fittings and clamps periodically for tightness and inspect hoses for holes or cracks. Make sure there is no path for dirt ingestion into the engine.

5.1.13 **IMPORTANT…** Do not operate engine without the air filter in place. Do not clean the filter element, replace with a new filter only. Improper cleaning of used air filter elements can get dust on the inside of the filter causing dirt ingestion and engine failure.

5.1.14 **Fuel Filter…** Refer to engine owner's manual for schedule and procedure for replacing.

5.1.15 **Spark Plugs…** Refer to engine owner's manual for schedule and procedure for replacing.

5.1.16 **Engine Cleaning…** Proper engine cooling is essential. To prevent overheating, clean screens, cooling fins, and other external surfaces of engine. See engine owner's manual for specific requirements.

Grease Points

5.2 Country Clipper has designed your mower to minimize the required grease points. Some components utilize sealed bearings, others utilize self-lubricating bushings. However, there are a few locations that require to be greased. These are shown below.

5.2.1 **Caster Wheels…** The grease zerk for the front caster wheel is located on the tire rim hub. There is a zerk located on each caster wheel. Re-lubrication should be at a rate of 10 pumps of NLGI #2 grease every 50hrs or annually.

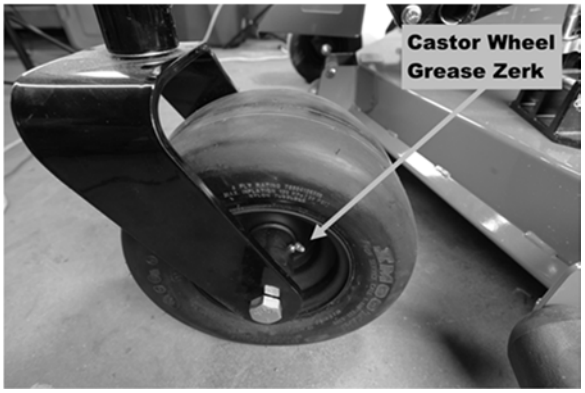

5.2.2 **Deck Lift Jack…** (If equipped)
Locate the grease zerk on the jack cross shaft. Re-lubrication should be at a rate of 5 pumps of NLGI #2 grease every 50 hours or annually.

5.2.3 **Caster Brake…** Disassemble, clean and apply a liberal film of grease between O-ring and top bearing. Reassemble and set locknut until desired rotational force is obtained.

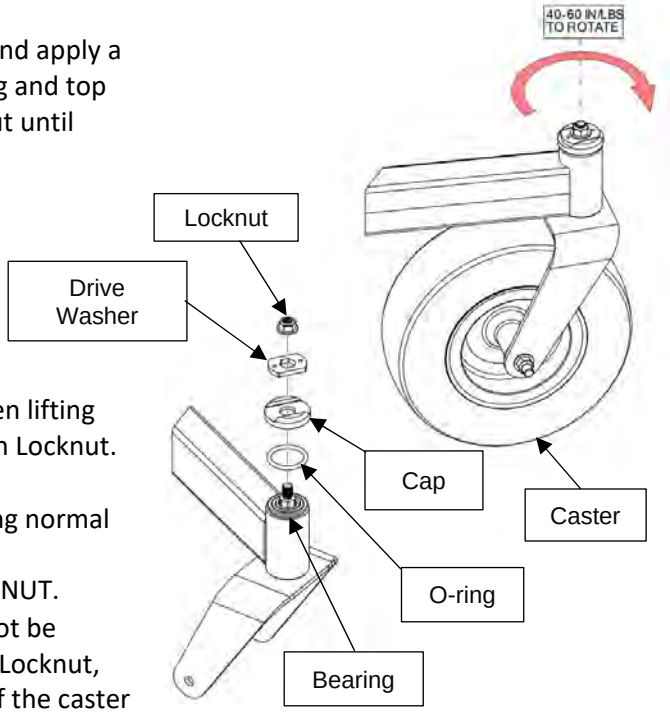

CASTER BRAKE ADJUSMENT

- If caster does not remain stationary when lifting the Deck up to service position… Tighten Locknut. DO NOT OVER TIGHTEN.
- If caster has excess rotational drag during normal operation… Loosen Locknut.
  DO NOT COMPLETELY DISENGAGE LOCKNUT.
- If proper rotational force of caster cannot be obtained with slight adjustments of the Locknut, disassemble, cleaning and re-greasing of the caster brake O-ring is required.

<u>Note</u>:

Tighten Locknut so it takes 40 – 60 IN/LBS to rotate the caster. Loosen or tighten locknut until this is achieved.

After 5 hours of service, inspect and adjust as necessary. After 100 hours or annually, clean and re-grease.

Tires

5.3 It is important that the proper tire pressure is maintained to obtain a level cut. Improper tire inflation will affect the deck level and quality of cut. Normally the tire inflation should be equal for all tires but there are instances that the tire inflation can be varied to obtain optimum cut quality.

5.3.1 **Recommend Tire Pressures…** Check tire inflation before each use.
Rear Drive Tires…… 10 to 16 PSI / 69 to 110 kPa (Recommended 12 PSI / 83 kPa)
Front Caster Tires…… 10 to 16 PSI / 69 to 110 kPa (Recommended 12 PSI / 83 kPa)

5.3.2 **Rear Drive Tire Lug Nuts…** Country Clipper recommends that the lug nut torque be checked within the first 5 hrs. of initial operation, thereafter every 50 hours. Repeat inspection process following the removal of tires for replacement or repair.
Wheel Lug Nut Torque…… 75 ft/lbs. (102 Nm)

	Warning
⚠	Attention must be given to inspecting the Drive Tire Lug Nuts for proper torque. Failure to correctly torque the nuts can result in the loss of a wheel, which can result in the loss of control of the mower. This is especially important when operating on slopes.

Belts

5.4 Belts should be inspected frequently for wear and serviceability. Belts showing signs of severe cuts, tears, separation, weather checking, cracking, and/or burns caused by slipping should be replaced. Slight raveling of belt covering does not indicate failure; trim the raveling/s from the belt. Additionally, the pulley grooves and flanges should be inspected for wear. A V-belt in good condition should never run against the bottom of the groove. If this is the case the pulley should be replaced, otherwise the belt will slip excessively. Excessive belt slip will cause loss of power and premature belt failure.
Keep oil and grease away from belts. These compounds will deteriorate the belt composition in a short time.

	Warning
⚠	If the Hydrostatic Transmission Drive Belt fails, loss of drive control will occur; especially when operating on a slope. If this occurs while operating the mower, place the Drive Control Lever(s) in Neutral Lock position, set the Park Brake, and turn the engine off. Inspect machine for cause and contact your Country Clipper dealer to remedy the issue before continuing

Electrical System

5.5 Your Country Clipper mower is a 12-volt, negative ground system.

5.5.1 **Battery…** Country Clipper uses a 12-volt maintenance free battery with 300 Cold Cranking Amps (CCA). When a replacement is required use the same or equivalent specification.

5.5.2 **Battery Cleaning**… Keeping the terminals and the battery case clean will help to extend the life of the battery. Battery cleaners are available or you can use a mixture of baking soda and water; use to clean the terminals, cables and the battery case. Once the acid is neutralized, rinse the battery with water. After cleaning the terminals and cables with a wire brush, reinstall the battery cables and use a terminal protector spray to protect the terminals from future corrosion.

	Warning
⚠	Avoid eye, skin, and clothing contact with battery acid. Acid can cause serious injury. Always wear eye and hand personnel protective equipment. If contact occurs, flush area with clean water and get medical attention. When charging the battery, keep away from ignition sources. Hydrogen gas forms in the battery; the gas is toxic and explosive. Always remove the negative ground first and reinstall last.

5.5.3 **Electrical Fuse…** Country Clipper uses two 30 Amp Fuses to protect the electrical system. The fuses are located behind the operators' seat on the main wire harness. The fuses protect the electric system from a direct short to ground.

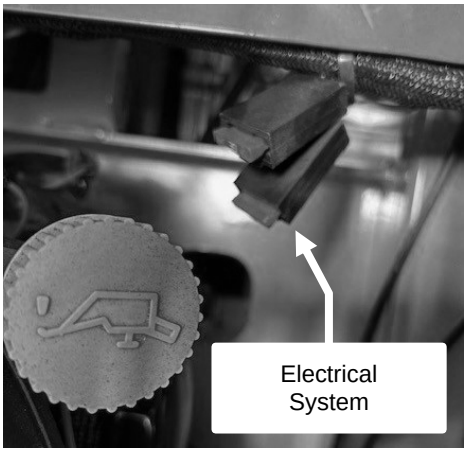

Deck Service

5.6 Your Country Clipper mower has been designed with a Stand-Up Deck feature to allow you access to the underside of your deck for cleaning and routine maintenance. There are two different procedures to stand up the deck depending on how your mower is equipped; Manual Lift or Powered Lift. All 52” & 60” decks models come standard with the Manual Lift option. The Powered Lift option can be installed on the 52” & 60” deck models as an optional accessory.

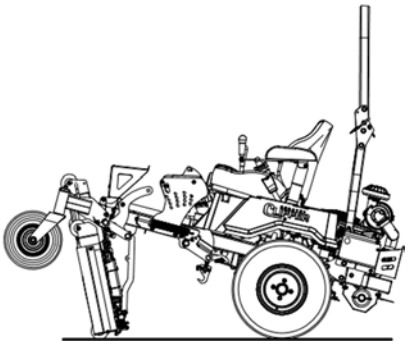

Manual Deck Lift Procedure (Service Position)

5.6.1 **Step 1. Position The Mower…** Standing up the deck must be done on a hard level surface. When positioning the mower on the hard surface, back up the mower so the Front Caster Tires swing away from the deck. Turn the engine off, and remove the key.

5.6.2 **Step 2. Transport Latch…** Move Transport Latch forward to the lock position and push the Cut Height Foot Pedal forward and lock the deck in the transport position.

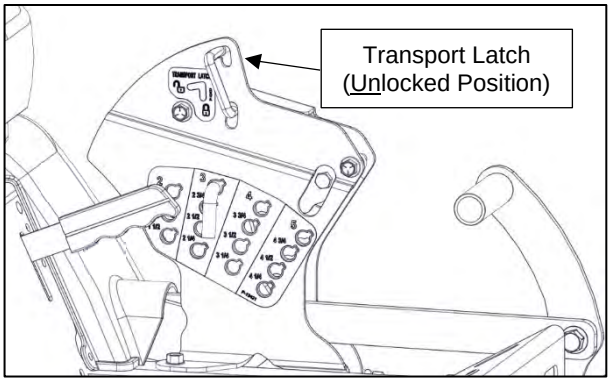

5.6.3 **Step 3. Lower Deck to Ground Surface…** Remove the Cut Height Pin from the Cut Height Selector plate. Push the Cut Height Foot Pedal Forward and move the Transport Latch to the unlock position. Lower the deck so it is resting on the ground surface.

5.6.4 **Step 4. Lock Deck in Lowest Position…** Step off the mower platform. Push the Cut Height Foot Pedal to the most rearward position and re-insert the Cut Height Pin in the Cut Height Selector plate so the Foot Pedal is locked down. (Note: This takes a fair amount of effort; a ½ inch breaker bar can be used in the Cut Height Foot Pedal to reduce the effort required.)

	Warning
	The Cut Height Foot Pedal is a Stored Energy Device when being locked down to stand up the deck and during the unlock process. Use extreme caution when performing this procedure. Keep bystanders clear of the area.

	Warning
	Never attempt to stand the deck up without the Cut Height Foot Pedal all the way rearward and locked in place with the Cut Height Pin. When properly done, the Rear Deck Hooks will be released from the deck hangers.

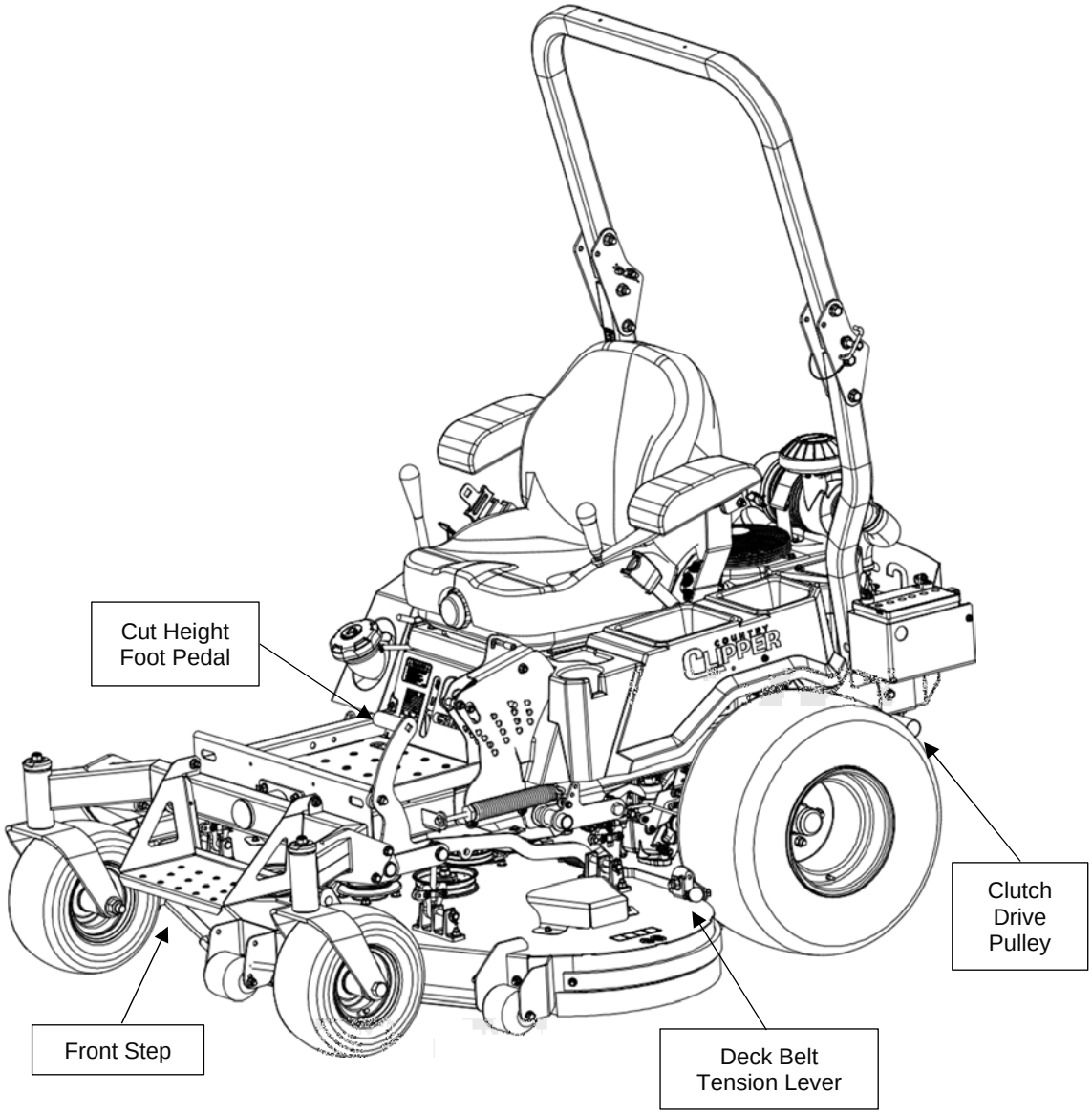

	Warning
	Allow mower to cool before releasing the deck belt from the clutch pulley.

5.6.5 **Step 5. Flip Up Front Step…** Pivot the Front Step up and towards the operator platform.

5.6.6 **Step 6. Release Deck Belt Tension & Disconnect Belt…**
Locate the Deck Belt Tension Lever at the rear of the deck on the trim side. Release the belt tension by slowly rotating the lever to remove the spring tension. With the tension removed on the belt, reach under the rear of the mower and remove the deck belt from the clutch drive pulley on the engine crank shaft.

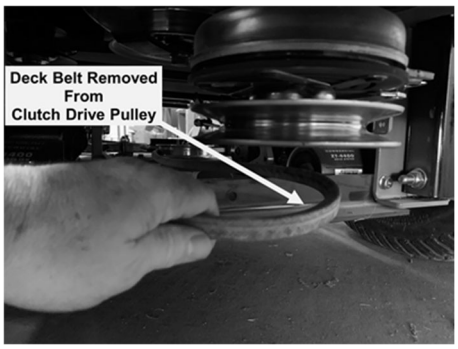

	Warning
	Do not attempt to lift the deck without releasing the deck belt from clutch pulley on the engine

	Warning
	Manually lifting the deck can be very strenuous. Use proper lifting techniques, lift with hips and knees (not your back). Adding a counter balance at the rear of the mower can reduce the effort. Keep bystanders clear of the area.

	Danger
	TO AVOID SERIOUS INJURY OR DEATH, KEEP HANDS, FEET, AND BODY PARTS AWAY FROM LIFT MECHANISM, DECK, AND REAR OF TRACTOR DURING LIFT TO AND FROM SERVICING POSITION.

5.6.7 **Step 7. Stand Up Deck…** Use the deck lift handle located in the center of the front edge of the deck to lift the nose of the deck up. Lift until the deck is fully upright and is "Over-Center" so it locks in place. Set the Parking Brake.

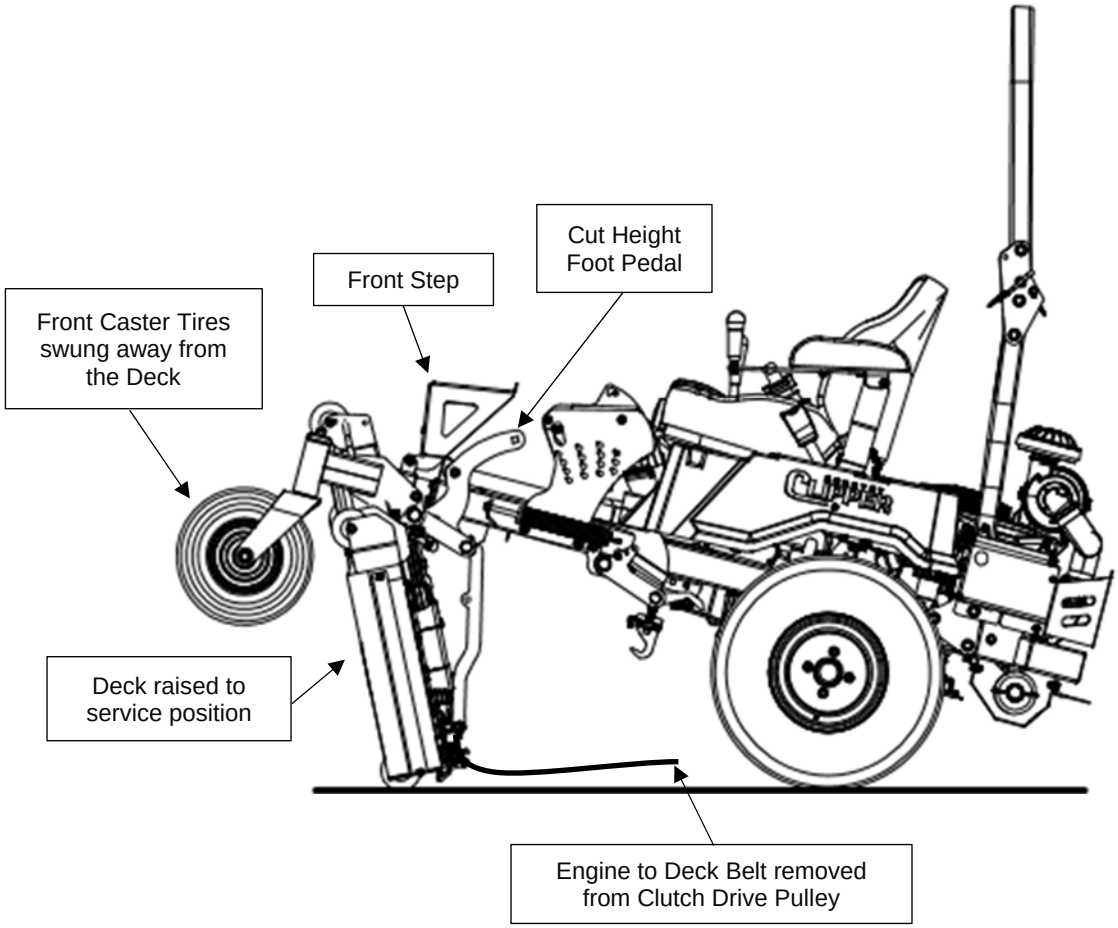

	Warning
	Check stability before servicing underside of the deck. Make sure Park Brake is on and the key is out of the Ignition Switch.

Manual Deck Lowering (Mowing Position)

5.6.8 **Step 1. Lower Deck…** While holding the lift handle, push the rear of the deck rearward towards the drive tires, lower deck until it rests on the ground surface.

5.6.9 **Step 2. Un-Lock Deck from Lowest Position…** Push the Cut Height Foot Pedal to the most rearward position and remove the Cut Height Pin in the Cut Height Selector plate. (Note: This takes a fair amount of effort; a ½ inch breaker bar can be used in the Cut Height Foot Pedal to reduce the effort required.)

	Warning
	The Cut Height Foot Pedal is a Stored Energy Device when being locked down to stand up the deck and during the unlock process. Use extreme caution when performing this procedure. Keep bystanders clear of the area.

5.6.10 **Step 3. Transport Latch…** Place Transport Latch in the lock position. Raise the deck up to the transport position and let it lock in place. Make sure both rear Deck Hangers re-connect to the Deck Hanger Clevis Pins.

5.6.11 **Step 4. Reconnect Deck Drive Belt…**
Re-install deck drive belt to the Electric Clutch Pulley. Check to make sure the belt routing is not impeded by the frame, transaxles, or other mower components. Additionally, ensure the belt is properly installed on all the deck pulleys and idlers. Slowly rotate Deck Belt Tension Lever and re-apply the spring tension to the belt.

5.6.12 **Step 5. Lower Foot Step…** Pivot the Front Step back down for use.

5.6.13 **Step 6. Cut Height Pin…** Re-insert the Cut Height Pin to the desired cut height.

5.6.14 **Step 7. Lower Deck to Cut Height…** Lower deck to desired cut height and position Transport Latch to the desired position.

Mower Blade Service

5.7 Mower blade sharpness should be checked daily or prior to each usage. A sharp blade in good condition is essential in obtaining an efficient quality of cut. A dull worn blade will tear the grass instead of cutting the grass, potentially leaving a brown ragged top on the grass within a few hours. Dull blades also require more power to operate.

5.7.1 **Damaged Blade…** Any blade which is bent, cracked or broken must be replaced.

	Warning
	Make sure the Ignition and Blade Engagement Switches are off, Drive Lever(s) in neutral lock, Brake on, and Negative battery cable disconnected prior to servicing.

	Warning
	Never attempt to straighten a bent blade by heating, or weld a cracked or broken blade as the blade may break and cause serious injury. Replace worn or damaged blades.

	Warning
	Wear the appropriate Personal Protective Equipment (PPE) when operating and/or servicing the mower. It is required that the operator or servicing personnel wear protective eye wear, hearing protection, hand protection and/or foot protection.

5.7.2 **Blade Removal**… Remove the 5/8-inch blade bolt and washer using a 15/16-inch wrench. The blade spindle can be held from turning by using 1 ½ inch wrench on the blade driver above the blade or by blocking the blade rotation with a block of wood.

5.7.3 **Blade Sharpening…** The blades can be sharpened with a grinder or touched up with a file. Note the angle of the cutting edge and try to maintain when sharpening.

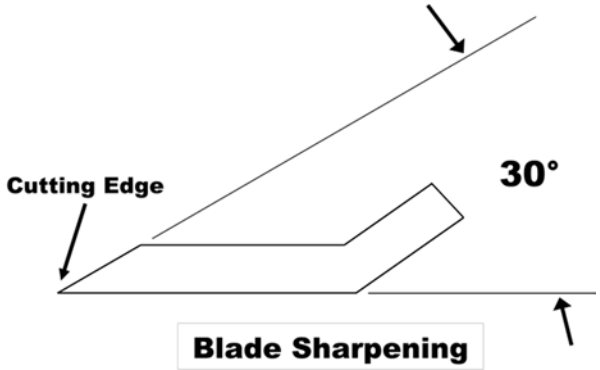

5.7.4 **Blade Balance…** Check the blade balance after sharpening. There are a variety of blade balancing techniques and commercial blade balancing tools available through a majority of hardware supply stores. If the blade is out of balance, true it up before re-installing.

5.7.5 **Blade Straightness…** Lay the blade on a flat surface and check to make sure both cutting edges are in the same cutting plane. Replace blade if warped or distorted.

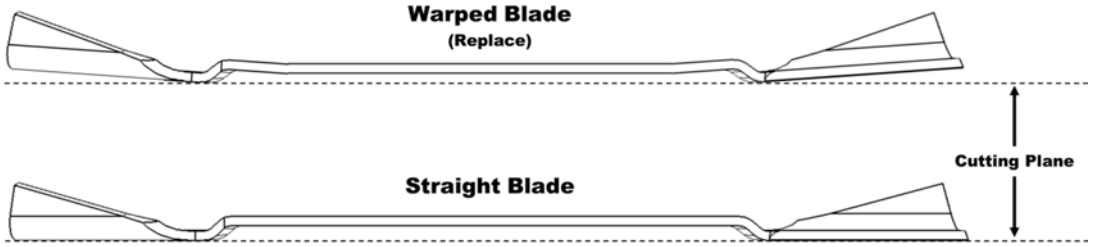

Warped vs. Straight

5.7.6 **Twisted Blade…** Also check the blade for twisting when placed on the flat surface. Replace blade if twisted or distorted.

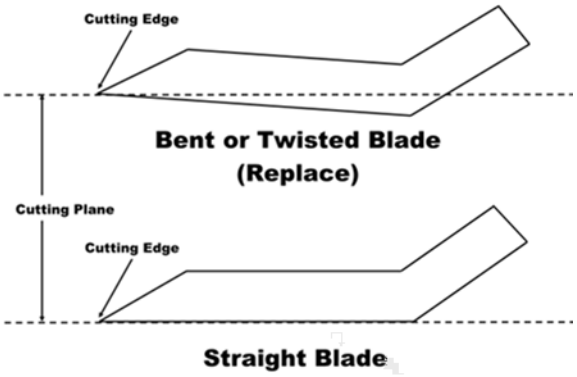

End View of Blade
(Twisted vs. Straight)

5.7.7 **Blade Wear…** Blades should be discarded if excessive wear, cracks, and/or distortion are present.

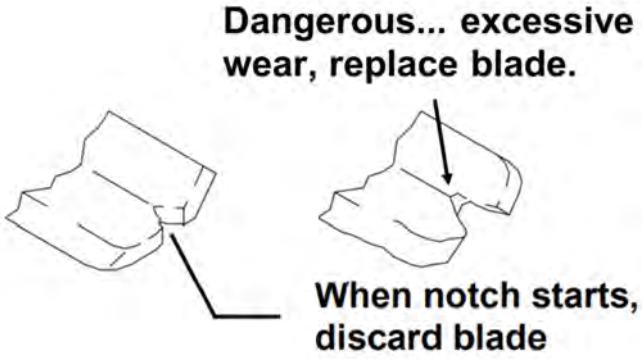

5.7.8 **Re-Install Blades…** Install blade, washer, and bolt to spindle assembly. Torque blade bolt to 100 ft-lbs. (136 Nm).

	DANGER
	FAILURE TO CORRECTLY TORQUE THE BLADE BOLT MAY RESULT IN THE LOSS OF THE BLADE WHICH CAN CAUSE SERIOUS INJURY OR DEATH.

Hydraulic Drive Service

5.8 Regular external maintenance of the Hydraulic Transaxle drives will ensure proper cooling of the hydraulic system. Maintenance should include the following:

5.8.1 **Oil Level…** Check oil level by removing the top port plug (see figure below). The oil level should be at the bottom of each transaxle's top port opening. If oil is required, remove the fill port plug and add oil until the oil level just reaches the top port. Then install top port plug and fill port plug into each transaxle. Torque each plug to 120 in. lbs.

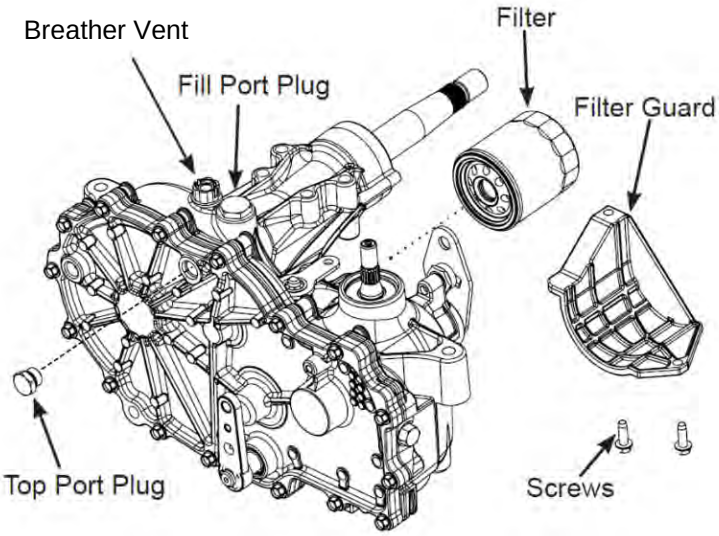

5.8.2 **Oil Recommendation…** 20W-50 engine oil with API classification of SL has been selected by the manufacture and is recommended for normal operating temperatures.

Oil Volume: Approximately 2 quarts (each transaxle)

5.8.3 **Fluid Change Recommendation…** To ensure constant fluid quality levels and longer life; an initial oil and filter change at 75 hours is recommended. Subsequent changes are recommended at 400 hr. intervals minimum.

Fluid Change Procedure

5.8.4 **Service Position…** Position the mower on a level surface, engage the park brake, and apply the Bypass Actuator. Thoroughly clean the transaxles around the fill plugs and the oil filters before removing.

5.8.5 **Drain Oil…** Place an oil drain pan (12 inch or more in diameter and 5 qt. capacity is optimal) beneath the transaxles. Remove the filter guards and filters from each transaxle to drain the oil.

5.8.6 **Plugs…** Remove the fill port plug and top port plug from each transaxle.

5.8.7 **Install New Filter…** After all the oil is drained out, replace the filters (use part H-2567 when ordering from Country Clipper). Wipe off the filter base surface, apply a film of new oil to the gasket of the new filter and hand tighten ¾ to one full turn after the filter gasket contacts the filter base surface.

5.8.8 **Fill Transaxle…** Fill the transaxles with new 20W-50 motor oil through the fill port plug opening. When the oil level in the transaxle reaches the bottom of the top port plug opening, reinstall the top port plug and fill port plug into each transaxle. Torque each plug to 120 in. lbs.

NOTE: Refilling both transaxles will take approximately 4 quarts of oil (2 quarts per transaxle).

5.8.9 **Purge Procedure…** Trapped air must be removed from the hydrostatic drive system to achieve optimum operation and longevity of the drive. Air creates inefficiency because its compression and expansion rate is higher than that of the oil approved for use in hydrostatic drive system.

5.8.10 **Drive Wheels Off Ground…** Raise the rear drive wheels off the ground and secure the mower on blocks or Jack Stands for the initial air purging.

5.8.11 **Activate Bypass…** Activate the Bypass to allow the drive tire to free wheel.

5.8.12 **Start Engine…** Start the engine and move throttle to ¾ to full throttle operation.

5.8.13 **Activate Drive Control Lever(s)…** Slowly operate the drive control lever(s) in both forward and reverse directions 5 to 10 times.

5.8.14 **Check Oil Level…** Check oil level; add oil as required after stopping the engine.

5.8.15 **Repeat As Necessary…** Repeat steps as necessary until all air is purged from the system.

5.8.16 **De-Activate Bypass…** De-Activate the Bypass to allow normal drive wheel operation.

5.8.17 **Drive Wheels on Ground…** Lower the rear drive wheels to the ground.

5.8.18 **Normal Operation…** Operate the mower for 30 to 60 minutes under normal driving conditions and re-check the oil level. Add oil as required.

Note: Any servicing dealer attempting a warranty repair must have prior approval before conducting maintenance of a Hydro-Gear product unless the servicing dealer is a current Authorized Hydro-Gear Service Center.

	Caution
⚠	On level ground the mower should track straight when the Joystick Drive Control Lever is shifted straight forward. If the mower veers left or right, make proper adjustments as outlined or contact a Country Clipper dealer for assistance.

Standard Operation Adjustments

5.9 Periodically adjustments may be required to maintain certain operating parameters or for operator preference. The following section will provide details on how to make these adjustments.

Parking Brake Adjustment

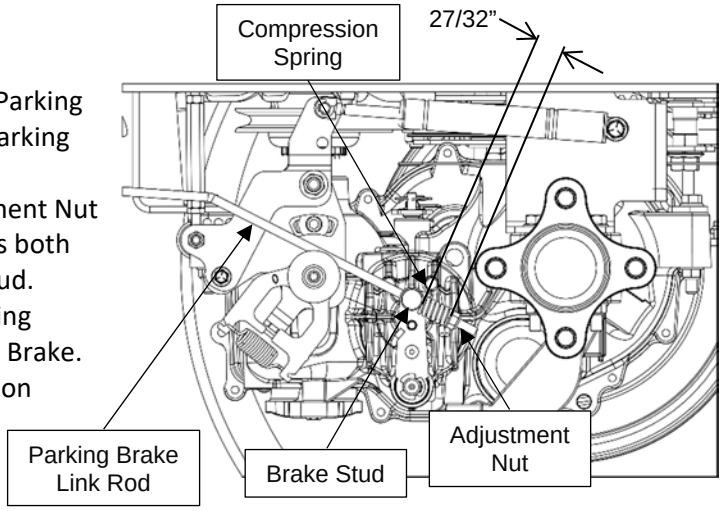

5.9.1 **Disengage Parking Brake…** Push the Parking Brake Lever down to disengage the Parking Brake.

5.9.2 **Adjustment Nut…** Adjust the Adjustment Nut until the Compression Spring contacts both the Adjustment Nut and the Brake Stud.

5.9.3 **Engage Parking Brake…** Pull the Parking Brake Lever up to engage the Parking Brake.

5.9.4 **Compression Spring…** The Compression Spring should be compressed to approximately 27/32”.

5.9.5 **Adjust Both Linkages…** Repeat the adjustment on the other side.

Joystick Forward Tracking & Speed Adjustment
(Always confirm tire pressure setting before making adjustment)

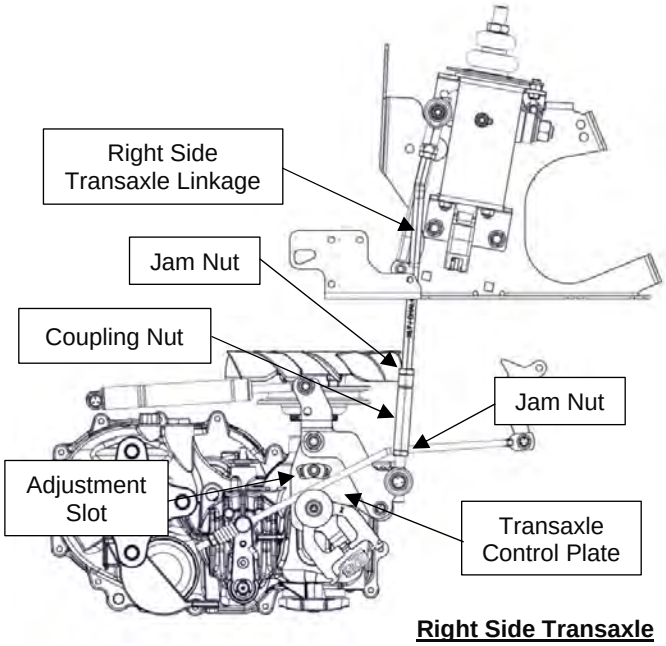

Right Side Transaxle

5.9.6 **Locate Mower on Hard Level Surface…** Locate mower on a hard level surface, engage Parking Brake and shut the engine off.

5.9.7 **Remove Right Side Fender…** Remove the Right-Side Fender to access the Right-Side Transaxle Linkage Coupling Nut.

5.9.8 **Control Linkage Adjustment…** Linkages that attach to the transaxle control plates will be adjusted to set the full speed and tracking. Loosen the jam nuts on both ends of the coupling nut and back the jam nut away from the coupling nut. (One of the jam nuts is left-handed thread).

Note: Use two wrenches (one on the nut and one on the coupling nut or rod end housing) when loosening or tightening jam nuts to prevent damaging the rod end ball joints.

5.9.9 **Lengthen Linkages…** Lengthen both linkages by turning the coupling nut several turns to make sure that the transaxle cannot bottom out in the adjustment slot when the Joystick Drive Control Lever is in the full speed forward position.

5.9.10 **Shorten Right Side Transaxle Linkage…** Hold the Joystick Drive Control Lever firmly in the full speed forward position, shorten the linkage to the right-side transaxle by rotating the coupling

nut until the transaxle control plate just contacts the end of the adjustment slot. (This may require the help of a second person).

5.9.11 **Set the Right-Side Transaxle Linkage Length…** Rotate the coupling nut exactly one full turn to lengthen the right-side linkage, retighten the jam nuts. When retightening, make sure that the ball joints on both top and bottom are aligned so that they do not bind up when moving the Joystick Drive Control Lever to the extremes of its travel.

5.9.12 **Shorten Left Side Transaxle Linkage…** Hold the Joystick Drive Control Lever firmly in the full speed forward position, shorten the linkage to the left side transaxle by rotating the coupling nut until the transaxle control plate just contacts the end of the adjustment slot (this may require the help of a second person).

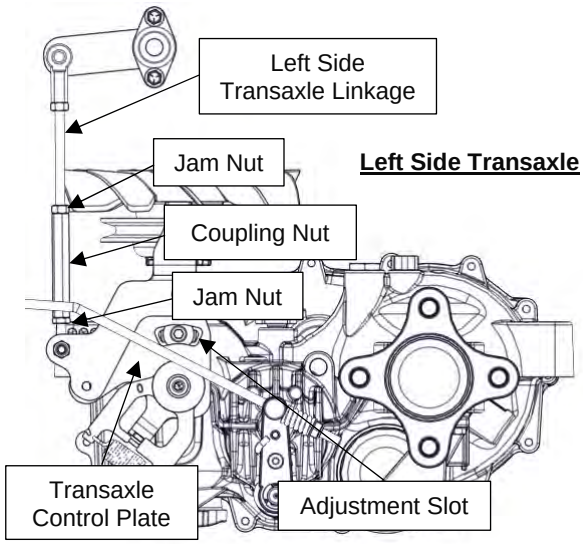

5.9.13 **Set the Left Side Transaxle Linkage Length…** Rotate the linkage exactly one full turn longer and retighten the jam nuts. Use two wrenches and make sure the ball joints on each end are aligned so that they do not bind up when moving the joystick lever to the extremes of its travel.

5.9.14 **Test Drive Mower…** Operate mower at full forward travel; if mower drives straight no further adjustment is required, if the mower veers to the left, the right-side transaxle needs to be slowed down, if the mower veers to the right, the left side transaxle needs to be slowed down.

5.9.15 **Adjust Full Forward Tracking…** Determine which transaxle needs to be slowed down to obtain straight forward travel. With the engine shut off, make small ¼ turn adjustments to lengthen the linkage on the side that needs to be slowed down. Test drive and repeat adjustment until the mower is traveling straight forward. (Caution – tracking adjustment could affect Neutral Lock Adjustment.)

Joystick Neutral Lock Adjustment

5.9.16 **Set Neutral Lock Position…** If the mower moves or travels with the engine running and the Joystick Drive Control Lever is in the Neutral Lock Position, the Neutral Lock position needs adjusted.

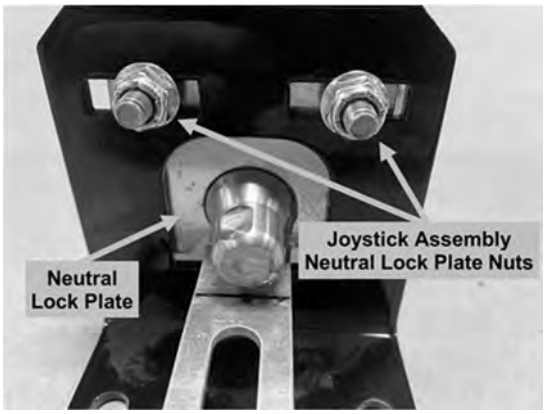

5.9.17 **Drive Wheels Off Ground …** Shut the engine off and raise the rear drive wheels off the ground, secure mower on blocks or jack stands.

5.9.18 **Loosen Neutral Lock Plate Nuts…** Locate the Neutral Lock Plate nuts on the bottom of the Joystick Assembly. Loosen the two nuts just enough to allow the plate to move.

5.9.19 **Adjust Neutral Plate…** Start the engine. With the Joystick Drive Control Lever in the Neutral Lock Position, grab the Joystick Lever and adjust the position of the Neutral Lock Plate so both wheels are stationary.

5.9.20 **Tighten Neutral Lock Plate Nuts…** Retighten the Neutral Lock Plate Nuts; be careful not to shift the plate during tightening.

5.9.21 **Recheck Neutral Lock Position…** Check to make sure Neutral Lock is adjusted as desired by positioning the Joystick Drive Control Lever in drive and operating forward and reverse and then reposition into the Neutral Lock position. Drive wheels should be stationary. Repeat process if necessary.

5.9.22 **Lower Drive Wheels to The Ground…** Lower drive wheels to the ground surface and reinstall Fender Skirt.

Twin Stick Neutral Lock Adjustment

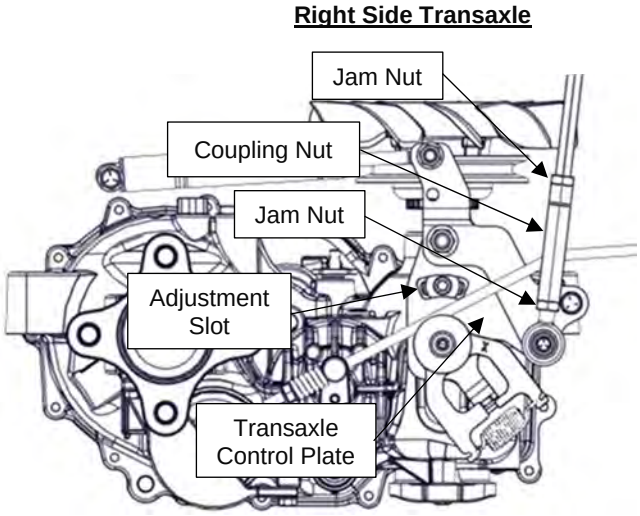

5.9.23 **Set Neutral Lock Position…** If the mower moves or travels with the engine running and the Twin Stick Drive Control Levers in the Neutral Lock Position; the Neutral Lock position needs adjusted. Each Twin Stick Drive Control Lever is linked directly to a Transaxle Control Plate via an adjustable length ball joint rod-end linkage.

5.9.24 **Drive Wheels Off Ground …** Shut the engine off and raise the rear drive wheels off the ground, secure mower on blocks or jack stands.

5.9.25 **Loosen The Coupling Nut…** Determine the side that needs adjustment. Locate the Coupling Nut on the linkage. Use two wrenches and loosen the Jam Nuts; spin Jam Nuts back a couple of turns. (**Note:** bottom Jam Nut has left-hand threads.)

5.9.26 **Adjust Coupling Nut…** Start the engine and maintain the Twin Stick Levers in the Neutral Lock position. Rotate the Coupling Nut until the drive wheel stops turning. Turn off the engine and retighten the jam nuts.

5.9.27 **Recheck Neutral Lock Position…** Check to make sure Neutral Lock is adjusted as desired by positioning the Twin Stick Drive Control Levers in drive and operating forward and reverse and then reposition into the Neutral Lock position. Drive wheels should be stationary. Repeat process if necessary.

5.9.28 **Lower Drive Wheels to The Ground…** Lower drive wheels to the ground and recheck Neutral Lock Position.

Twin Stick Forward Tracking Adjustment

5.9.29 **Forward Tracking…** In an open area, actuate the Twin Stick Drive Control Levers into the full forward position at ¾ to full engine throttle. If the mower veers either left or right, some adjustment is required. If mower is veering to the right, then the left transaxle needs to be slowed down or vice versa.

5.9.30 **Position Mower…** Stop the mower, engage Park Brake, and shut the engine off.

5.9.31 **Adjust Tracking…** On the transaxle that needs adjustment; turn the Tracking Adjustment Screw in until it contacts the Stop, then turn screw at ½ turn (slowing speed) increments, until the mower tracks straight.

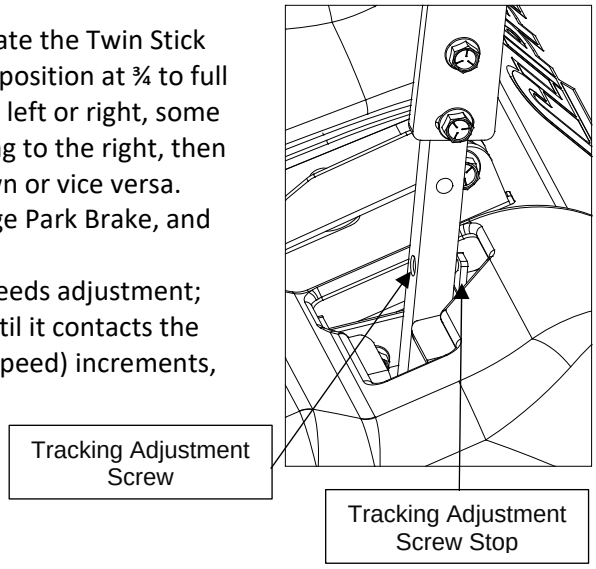

Twin Stick Handle Adjustments

5.9.32 **Twin Stick Handle Height Adjustment…** The length or height of the handles has two available positions. Mount the handles in the upper set of holes or the lower set of holes for maximum operator comfort.

5.9.33 **Twin Stick Fore & Aft Adjustment…** Adjust the handles fore and aft position before tightening the handle mounting bolts. The fore/aft position of the handles should be set such that they are aligned with each other while in the neutral position.

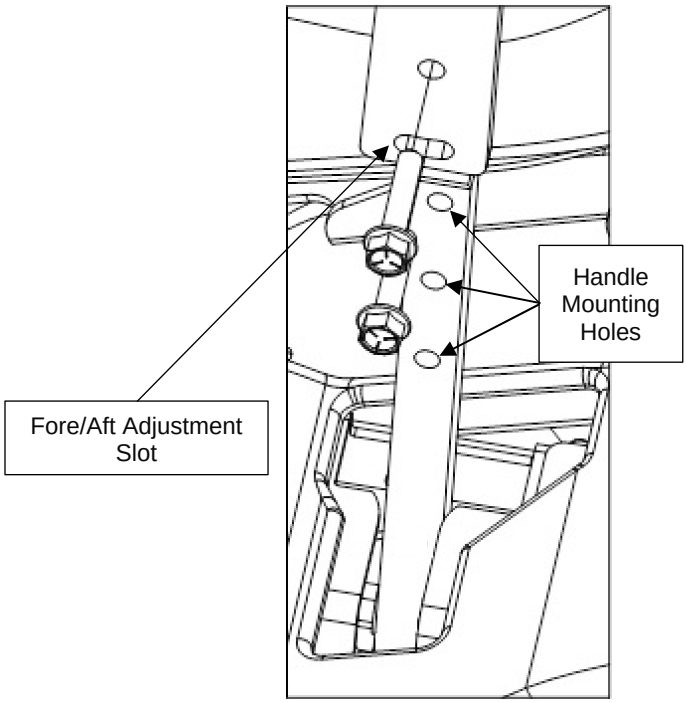

Shift Damper Force Setting… The force required to move the Drive Control Lever(s) can be increased or decreased to the operator's preference. To increase the required shifting force, mount the damper and spring in the heavy setting holes on both sides of the mower. To decrease the required shifting force, mount the damper and spring in the light setting holes on both sides of the mower. Factory setting for the Joystick Drive Control Lever is the light position. Factory setting for the Twin Stick Drive Control Levers is the heavy position.

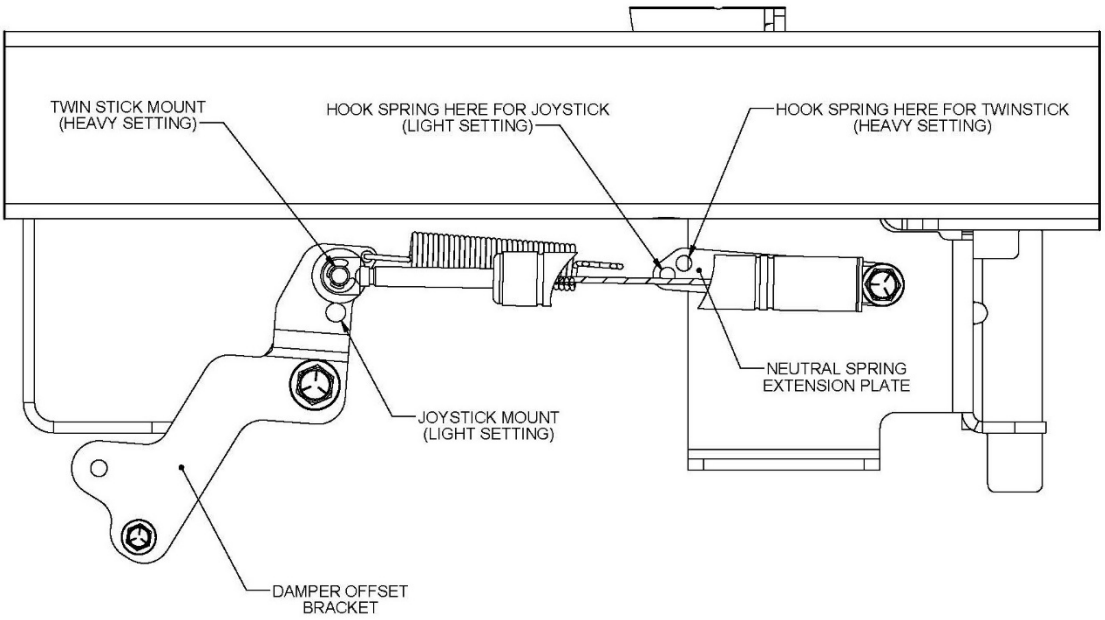

Deck Leveling Adjustment

(Note: The deck has been factory leveled. If leveling is required follow this procedure.)

5.9.34 **Locate Mower on Hard Level Surface…** Locate mower on a hard level surface, engage Park Brake and shut the engine off.

5.9.35 **Confirm Tire Pressure…** Set the tire pressure on each of the four tires to 12psi (83kPa). (Make sure all four tires are equal).

5.9.36 **Set Cut Height To 3 Inches…** Set the deck cutting height to 3 inches and rotate the two outside

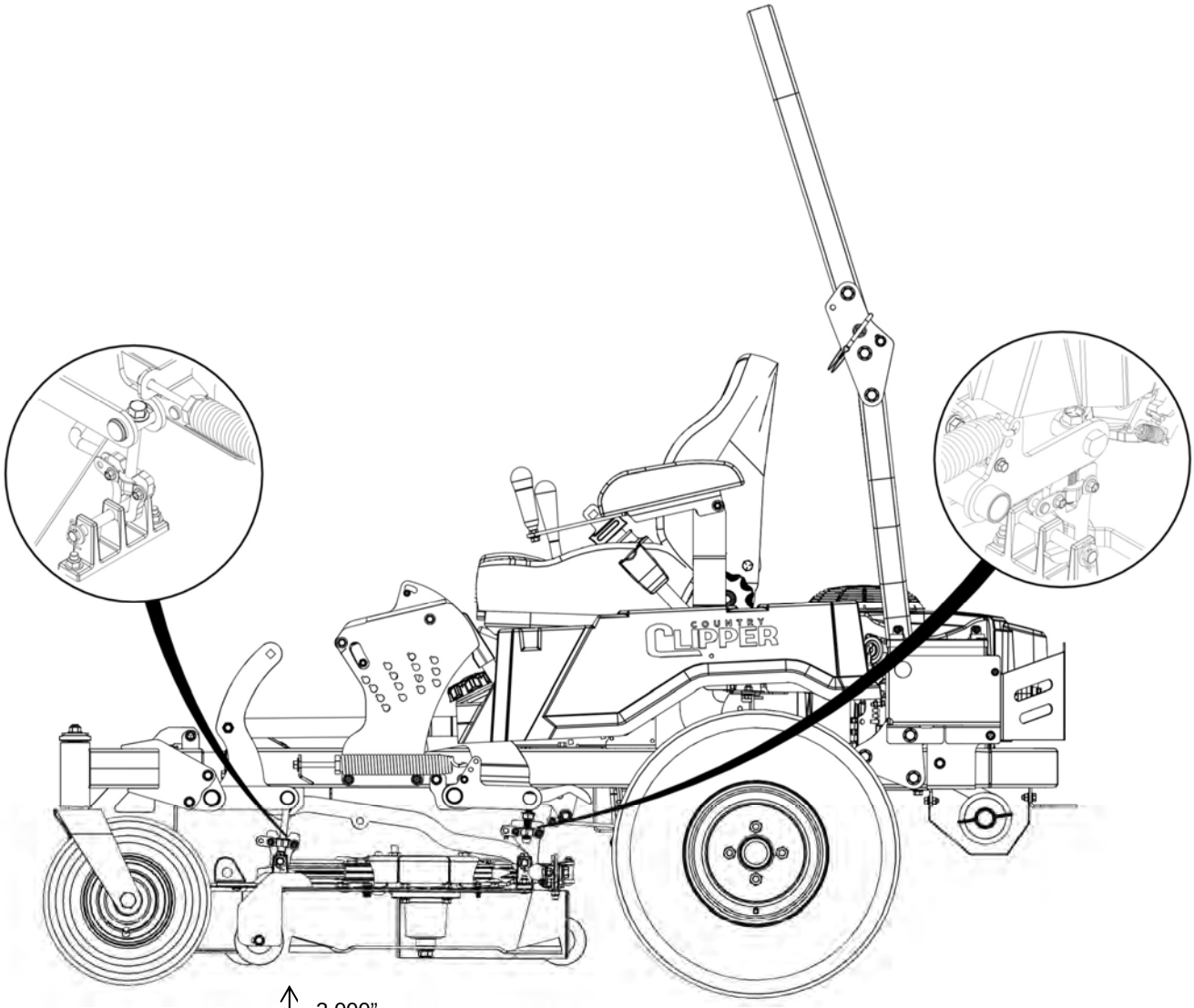

blades by hand until the end of each outside blade points forward (toward the front of tractor).

5.9.37 **Ground to Blade Tip Measurement…** Measure from the ground to the front blade tip on each outside blade of the deck. These measurements should be approximately 3 inches and within 1/8 inch of each other.

(**Note:** To simplify this measuring, an optional Blade Measuring Tool, part number 629-374A is available from your local Country Clipper Dealer).

(**Important:** Do not attempt to set the deck cut height higher or lower than specified. This could cause failure of the deck drive system.)

5.9.38 **Front Deck Height of Cut Adjustment…** If adjustment is needed; turn the Height of Cut Adjusting Bolt clock-wise to raise the deck, turn the Height of Cut Adjusting Bolt counter clock-wise to lower the deck so the blade height is approximately 3 inches. Make sure the left and right-side measurements are within 1/8 inch from one side to the other.

5.9.39 **Rear Blade Tip Measurement (Deck Rake) …** Measure the rear blade tip height from the ground on both sides of the deck. The rear blade tip height should be equal or greater than the front blade tip height. Country Clipper recommends that the rear blade tip measure 1/8 to 1/4 inch higher than the front blade tip measurement.

5.9.40 **Rear Deck Height of Cut Adjustment…** If adjustment is needed; turn the Height of Cut Adjusting Bolt clockwise to raise the deck, turn the Height of Cut Adjusting Bolt counter clockwise to lower the deck. Make sure the left and right-side measure approximately within 1/8 inch from one side to the other.

5.9.41 **Recheck Deck Blade Tip Measurements…** Recheck all measurements. Make adjustments as required.
(NOTE: Deck should be hanging equally on all 4 Deck Hangers when properly adjusted.)

5.9.42 **Set Deck to Desired Cut Height…** Set deck to the desired operation cut height position.

Deck Lift Assist Spring

5.9.44 **Deck Lift Assist Spring…** The Deck Lift Assist Spring is used to reduce the effort required to raise and/or lower the deck. Changing the length of the spring stretch will have a direct effect on this effort. Reducing the gap between the Spring Anchor Tab and Deck Lift Assist Spring will decrease the effort required to lift the deck. Increasing the gap will increase the effort.
(Note: Reducing the gap between the Spring Anchor Tab and Deck Lift Assist Spring beyond the Factory Settings can cause cut quality issues. The deck can float up, especially when operating over rough ground.)

5.9.45 **Factory Settings…** Country Clipper recommends the following measurements between the Spring Anchor Tab and the Spring:
48” & 52” Deck = 1 inch
60” Deck = 0.5 inches

5.9.46 **Adjust Spring Length…** Turn the bolt clockwise to reduce the gap; counter clockwise to increase the gap.

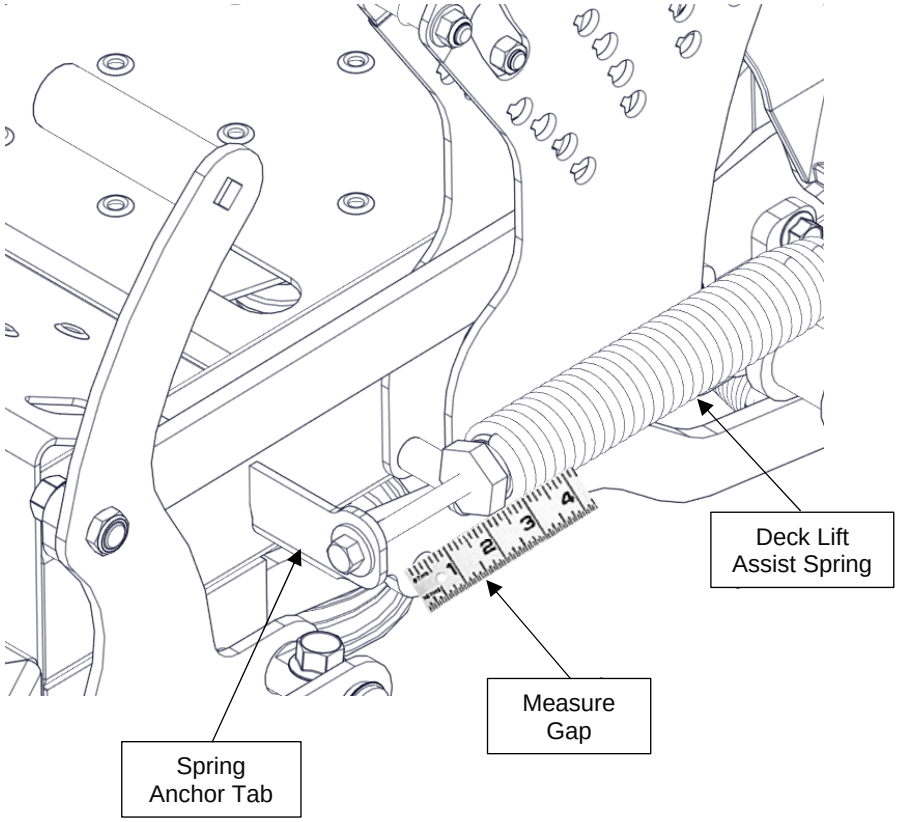

Section 6… Troubleshooting

Problem	Cause	Remedy
Engine Will Not Turn Over	Mower blade engagement switch is in “On” position	Press switch down to “Off” position
	Drive Control lever(s) not in “Neutral” position	Joystick… press control lever down to “Neutral Lock” position
		Twin Stick… move drive levers out to “Neutral Lock” position
	Dead battery	Re-charge or replace battery
	Blown fuse	Replace fuse and/or investigate cause and correct
	Stater Solenoid	Consult Country Clipper Dealer
	Ignition Switch	Consult Country Clipper Dealer
	Engine Starter	Consult Country Clipper Dealer
	Other	Consult Engine Owner Manual or C.C. Dealer
Engine Turns Over But Won’t Start	No Gas	Refuel gas tank, Clean or Replace fuel filter
	Engine choke	Engine Cold… Pull choke to “On” position
		Engine Warm… Push choke to “Off” position
	Spark Plug	Clean and re-gap (Consult Engine Owner Manual)
	Ignition switch	Consult Country Clipper Dealer
	Malfunctioning carburetor	Consult Country Clipper Dealer
	Other	Consult Engine Owner Manual or C. C. Dealer
Engine Starts Hard	Fuel line clogged	Clean line, replace fuel filter or Consult Dealer
	Faulty fuel pump	Consult Country Clipper Dealer
	Spark plug wire loose or shorted to ground	Check spark plug wires
	Spark plug(s) faulty or improperly gapped	Clean & re-gap (Consult Engine Owner Manual)
	Electronic ignition defective	Consult Country Clipper Dealer
	Contaminated or maladjusted carburetor	Consult Country Clipper Dealer
	Other	Consult Engine Owner Manual or Dealer
Engine Starts But Runs Rough, Erratically, Misfires, or Cuts Out	Water in gasoline	Drain gasoline from fuel tank and carburetor bowl - refuel with fresh gasoline
	Fuel line clogged	Clean line, replace fuel filter or Consult Dealer
	Fuel tank vent hose pinched or restricted	Correct restriction
	Faulty fuel pump	Consult Country Clipper Dealer
	Maladjusted carburetor	Consult Country Clipper Dealer
	Seat Safety Switch is working intermittently	Slow down on rough terrain. Inspect electrical connection at seat switch.
	Engine dies when Drive Control Lever(s) is/are in “Drive” position	Check parking brake… release brake to the “Off” position
	Other	Consult Engine Owner Manual or C.C. Dealer
Engine Excessive Oil Consumption	Other	Consult Engine Owner Manual or C.C. Dealer
Mower Hydraulic Drive has No/Low Power in Either Direction	Transmission linkage out of adjustment	Re-adjust drive linkage
	Bypass / Tow valves open	Close Bypass valve
	Traction drive belt is worn, loose, or broken	Install new traction drive belt
	Air trapped in hydraulic system	Purge transaxles
	Excessive loading	Reduce vehicle loading
	Engine speed low	Adjust to correct rpm
	Transaxle oil level is low	Fill to proper level or Consult C.C. Dealer
	Internal issue or leakage in drive transaxle	Consult Country Clipper Dealer
	Other	Consult Country Clipper Dealer
Mower Operates in One Direction Only or Jerky When Starting	Transmission linkage out of adjustment	Re-adjust drive linkage or Consult C.C. Dealer
	Drive belt slipping or pulley damage	Repair or replace drive belt or pulley
	Bypass valves not closed completely	Close Bypass valves
	Air trapped in hydraulic system	Purge transaxles
	Transaxle faulty	Consult Country Clipper Dealer
	Other	Consult Country Clipper Dealer

Problem	Cause	Remedy
Transaxle Leaks Oil	Damaged seal, housing, or gaskets	Replace damaged components
	Air trapped in hydraulic system	Purge hydraulic system
	Other	Consult Country Clipper Dealer
Mower Creeps when Steering Control Lever/s are in Neutral Lock Position	Transmission linkage out of adjustment	Re-adjust drive linkage
	Neutral Lock positon not adjusted properly	Re-adjust neutral lock position
	Other	Consult Country Clipper Dealer
Mower Veers or Circles in One Direction	Transmission linkage out of adjustment or bent	Re-adjust drive linkage or replace if bent
	Tires improperly inflated	Inflate to the proper air pressure
	Tracking out of adjustment	Re-adjust tracking or replace if bent
	Transaxle faulty	Consult Country Clipper Dealer
Transaxle Noisy	Oil level low or contaminated oil	Fill to proper level or change oil & filter
	Excessive loading	Reduce vehicle loading
	Loose parts	Repair or replace loose parts
	Bypass assembly sticking	Repair or replace linkage
	Air trapped in hydraulic system	Purge hydraulic system
	Other	Consult Country Clipper Dealer
Engine Stalls when Blades are Engaged	Operator not on seat	Sit on seat
	Faulty Safety Interlock system	Consult Country Clipper Dealer
	Blades blocked by foreign material	Remove material blocking blade rotation
	Deck drive belt not properly routed	Repair or Consult Country Clipper Dealer
	Other	Consult Country Clipper Dealer
Mower Blades Do Not Rotate	Deck belt tension lever disengaged	Engage deck belt tension lever to apply tension on belt
	Deck drive belt off pulley(s)	Re-install belt
	Electric Clutch not engaging	See Electric Clutch Not Engaging Mower Blades
	Deck drive belt broke	Replace belt
	Other	Consult Country Clipper Dealer
Electric Clutch Not Engaging Mower Blades	Blade Engagement Switch malfunction	Consult Country Clipper Dealer
	Electric Clutch wire connector disconnected	Re-connect connector to main harness connector
	Fuse blown	Check fuses – repair and replace as required
	Electric Clutch wires damaged	Consult Country Clipper Dealer
	Electric Clutch air gap adjustment required	Consult Country Clipper Dealer
	Electric Clutch malfunction	Consult Country Clipper Dealer
	Battery voltage and/or current to low	Test battery – replace as required
	Other	Consult Country Clipper Dealer
Blades Do No Stop Within 7 seconds of Disengagement	Electric Clutch adjustment or replacement required	Consult Country Clipper Dealer
Excessive Belt Wear or Breakage	Bent or damaged pulley	Repair or replace
	Use of incorrect belt	Replace with correct OEM belt
	Incorrect belt tension	Consult Country Clipper Dealer
	Incorrect belt alignment	Consult Country Clipper Dealer
	Other	Consult Country Clipper Dealer

	Important
	Consult your Country Clipper Dealer for assistance in troubleshooting and/or repairing problems.

Common Cut Quality Problems

Problem: Streaking		**Problem:** Stringers	
Streaking is when thin strips of uncut grass are left after mowing. Streaking commonly occurs by operator error or poor blade maintenance.		Stringers are sparse patches of uncut grass left behind in the lawn surface. Stringers commonly occur by operator error or poor blade maintenance.	
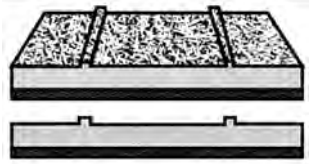		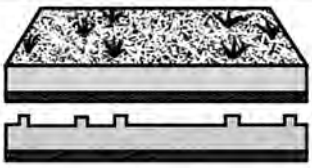	
Cause	**Remedy**	**Cause**	**Remedy**
Blades not sharp.	Sharpen blades.	Blades not sharp.	Sharpen blades.
Blades worn down.	Replace blades.	Blades worn down.	Replace blades.
Engine speed too low.	Operate engine @ full throttle.	Engine speed too low.	Operate engine @ full throttle.
Ground speed too fast.	Slow down.	Ground speed too fast.	Slow down.
Deck plugged w/ grass.	Clean mower deck.	Deck plugged w/ grass.	Clean underside of mower deck.
Not overlapping cutting rows enough.	Increase overlap when cutting.		
Not overlapping enough when turning.	Effective cutting width decreases when turning; increase overlap when turning.		

Problem: Scalping		**Problem:** Uneven Cutting	
Scalping is when the mower blade comes close to or hits the ground. Scalping typically occurs due to deck maladjustment, uneven lawn, or by deck bounce at high ground speed.		Uneven Cutting is waviness or smooth troughs in the lawn surface. Uneven Cutting typically occurs due to mower deck damage or maladjustment.	
		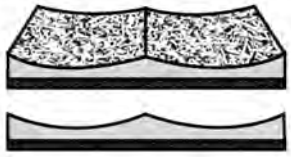	
Cause	**Remedy**	**Cause**	**Remedy**
Lawn uneven or bumpy.	Roll or level lawn.	Deck level correct.	Correct deck level.
Cut height too low.	Raise cutting height.	Blades worn or dull.	Sharpen or replace blade.
Ground speed too fast.	Slow down.	Blades damaged.	Replace blades.
Deck level incorrect.	Correct deck level.	Deck plugged w/ grass.	Clean underside of mower deck.
Tire improperly inflated.	Inflate to proper air pressure.	Deck shell is damaged.	Repair or replace deck shell
Deck Floating	Decrease Deck Lift Assist Spring Tension and raise cut height.	Blade spindle bent or loose.	Repair or replace spindle.
		Tire(s) improperly inflated.	Inflate to proper air pressure.
		Blades installed wrong.	Reinstall blades correctly.

Problem: Stepped Cutting		
Stepped Cutting is when sharp ridges or uneven levels are present on the lawn surface. Stepped Cutting typically occurs when the deck is misadjusted or damaged, or the mower blade(s) are damaged.		
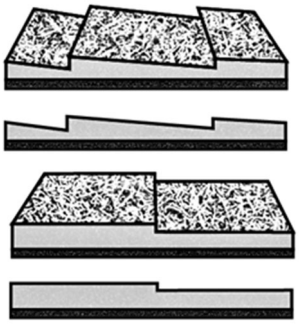	**Cause**	**Remedy**
	Deck level incorrect.	Correct deck level.
	Tire(s) improperly inflated.	Inflate to proper air pressure.
	Blades damaged.	Replace blades.
	Deck shell is damaged.	Repair or replace deck shell
	Blade spindle bent or loose.	Repair or replace spindle.
	Blades installed wrong.	Reinstall blades correctly.
	Deck floating.	Adjust Deck Lift Assist Spring-Set both springs equally.

Section 7... Belt Routing

48”, 52” & 60” Deck Belt Routing

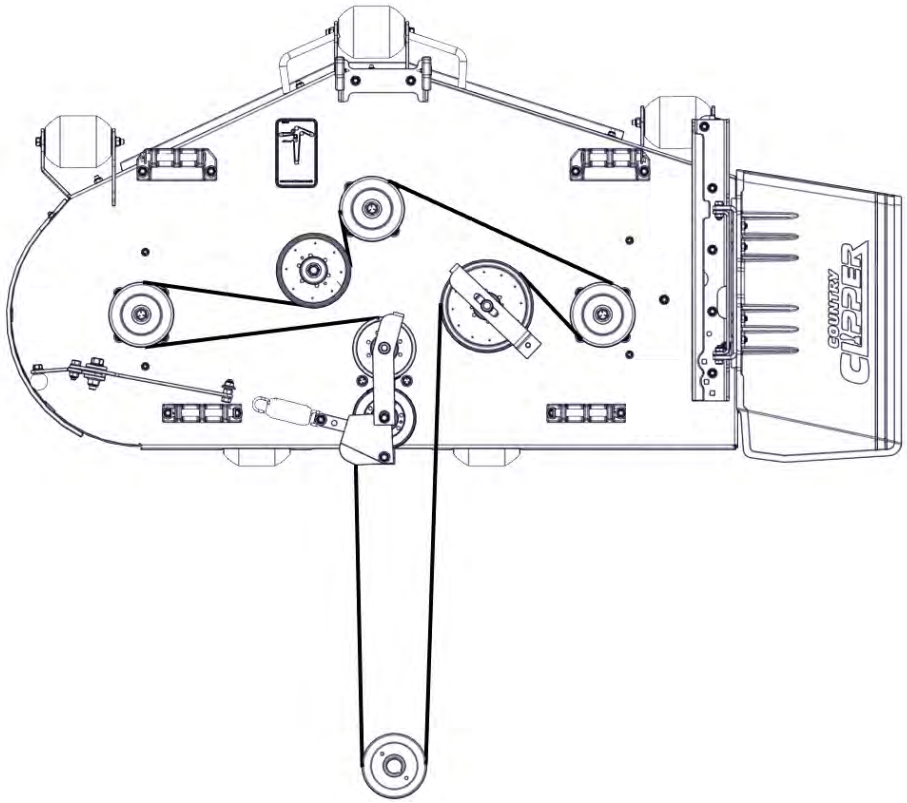

Hydro Belt Routing

(Viewed from ground looking up)

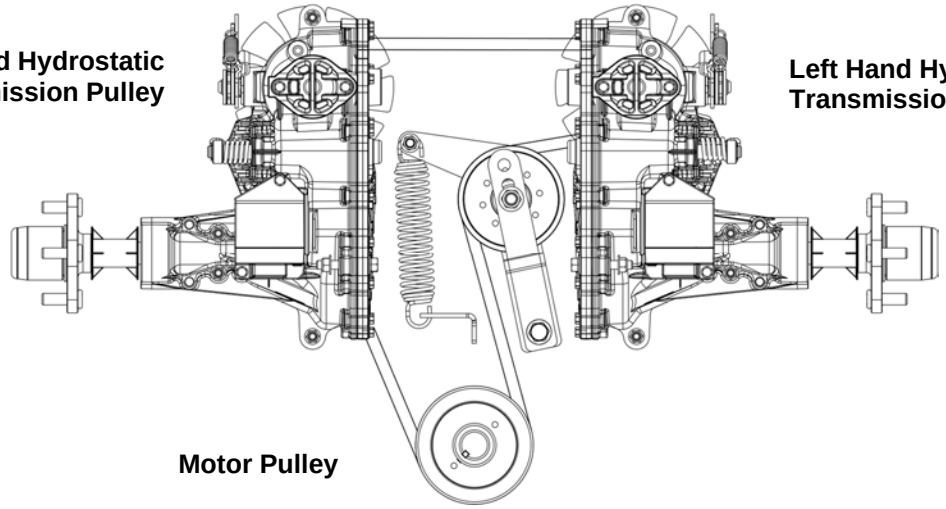

Section 8... Maintenance Record

Date	Hours	Service Performed

Repair Parts

COUNTRY CLIPPER
ZERO TURN MOWER

XLT

C330 / C330W

SERIAL RANGE: 26264001 - _____

P-13823 (Rev B)

COUNTRY CLIPPER
XLT - C330 / C330W
SERIAL RANGE 26264001 - _____
ZERO TURN RADIUS MOWER
TABLE OF CONTENTS

SECTION 1 – MOWER DECKS AND RELATED PARTS

1. 48” DECK ASSEMBLY
2. 52” DECK ASSEMBLY
3. 60” DECK ASSEMBLY
4. DISCHARGE CHUTE ASSEMBLY
5. DECK SPINDLE ASSEMBLY
6. DOUBLE IDLER DRIVE BELT IDLER
7. BELT TENSION LEVER
8. FIXED IDLERS & RELATED PARTS
9. DECK LIFT ASSEMBLY & RELATED PARTS
10. DECK LIFT ASSEMBLY & RELATED PARTS (CON’T)
11. CUT HEIGHT ASSEMBLY & RELATED PARTS

SECTION 2 – TRACTOR FRAME AND RELATED PARTS

12. PIVOTING FRONT AXLE & FOOT PAN
13. TIRES AND FRONT STEP
14. FRONT PANEL ASSEMBLY & RELATED PARTS
15. FRONT PANEL ASSEMBLY & RELATED PARTS (CON’T)
16. BATTERY BOX & ARM REST BRACES
17. BRAKE ASSEMBLY
18. BRAKE ASSEMBLY (CON’T)

SECTION 3 – TRACTOR DRIVE AND RELATED PARTS

19. FUEL TANK ASSEMBLY
20. JOYSTICK CONTROL & RELATED PARTS
21. JOYSTICK ASSEMBLY
22. JOYSTICK ASSEMBLY MOUNTING & RELATED PARTS
23. TWIN LEVER CONTROL & RELATED PARTS
24. TWIN LEVER ASSEMBLY
25. CONTROL PANEL
26. FENDER ASSEMBLY & RELATED PARTS
27. TRANSMISSION ASSEMBLY & RELATED PARTS
28. DAMPER, OFFSET BRACKET, & RETURN TO NEUTRAL HARDWARE
29. SEAT BASE & RELATED PARTS
30. SEAT, ARM RESTS & RELATED PARTS
31. ENGINE
32. ENGINE & CLUTCH MOUNTING & RELATED PARTS
33. WIRE HARNESS & RELATED PARTS
34. WIRE HARNESS SCHEMATIC

Country Clipper Division, Shivvers Manufacturing Inc. 613 W English St. Corydon, IA 50060-0467 Ph. 641-872-2544 Fax. 641-872-1593

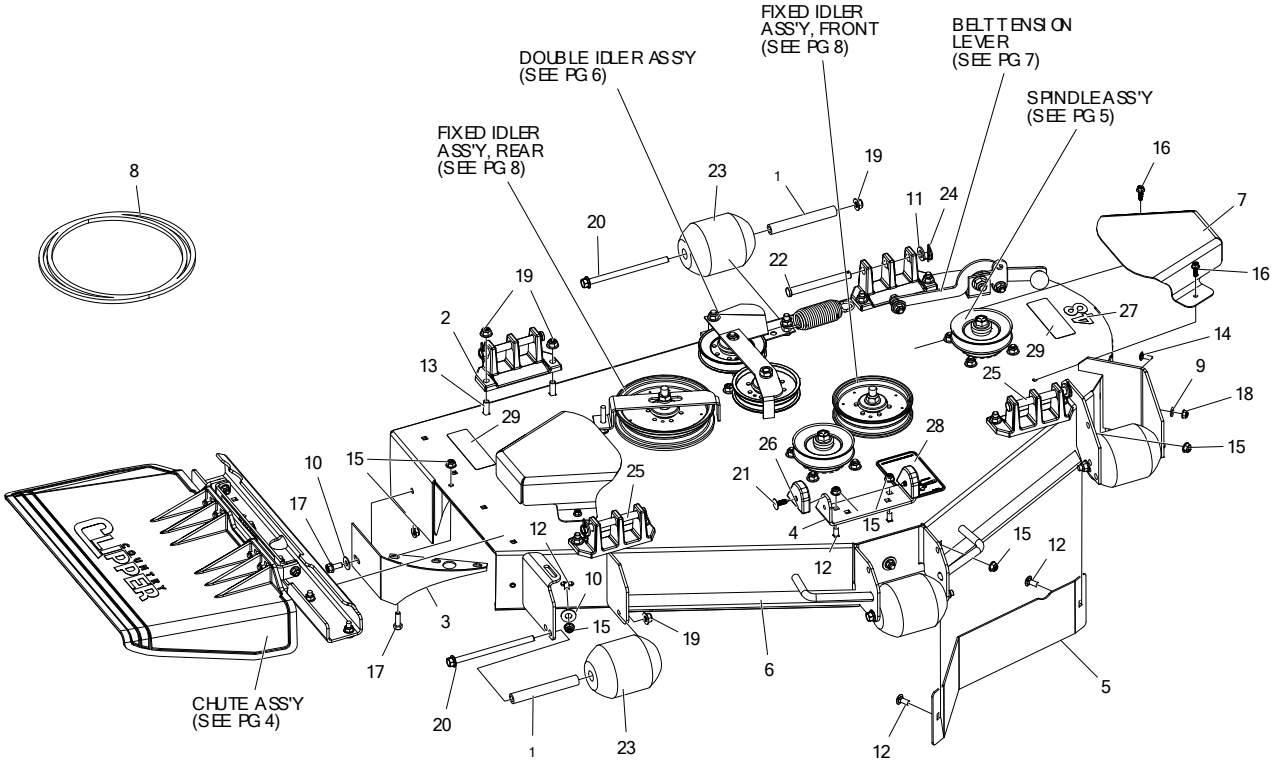

ITEM #	QTY	PART #	DESCRIPTION
1	5	609-183P	BUSHING
2	4	651-009W	DECK HANGER, WIDE BASE
3	1	686-080W	SPLITTER, DISCHARGE
4	1	722-034P	DECK STOP
5	1	722-041P	DEFLECTOR PLATE
6	1	722-053A	48" DECK W/ DECALS
7	2	722-033P	PULLEY COVER
8	1	D-3775-W	BELT B-158" KEVLAR WRAPPED
9	1	F-1009-01	FLAT WASHER, 1/4", YZ
10	3	F-1009-02	WASHER, FLAT
11	4	F-1521	WASHER, 1/2" CUSTOM, YZ
12	6	F-1671	CARRIAGE BOLT,5/16-18 X 3/4", YZ, GR5
13	8	F-1672	BOLT, CARRIAGE, 3/8-16 X 1-1/4", YZ, GR5
14	1	F-1823	BOLT, CARRIAGE, 1/4-20 X 3/4
15	9	F-2063	NUT, 5/16-18, NYLOC, FLANGED, YZ
16	4	F-2119	FHCS, 1/4-20 X 3/4", YZ, GR5, LOCK PATCH
17	3	F-2120	FHCS, 5/16-18 X 3/4", YZ, GR5
18	1	F-2132	NUT, 1/4-20 NYLOC, FLANGED, YZ
19	13	F-2151	NUT, 3/8-16 NYLOC, FLANGED, YZ
20	5	F-2161	FHCS, 3/18-16 X 6" YZ, GR5
21	2	F-2250	CLIP, FIR TREE, 1/4" X 1", BLACK NYLON
22	2	F-2389	1/2" X 5" CLEVIS PIN
23	5	H-1948	ROLLER, 3-3/4 DIA
24	4	H-2239	1/2" RUE RING
25	2	H-2240	1/2" X 4-1/2" CLEVIS PIN
26	2	H-3091	WEAR PAD
27	1	P-11950	DECAL, DECK SIZE, 48
28	1	P-12837	DECAL, DECK BELT ROUTING
29	2	P-13749	DECAL, DECK SAFETY

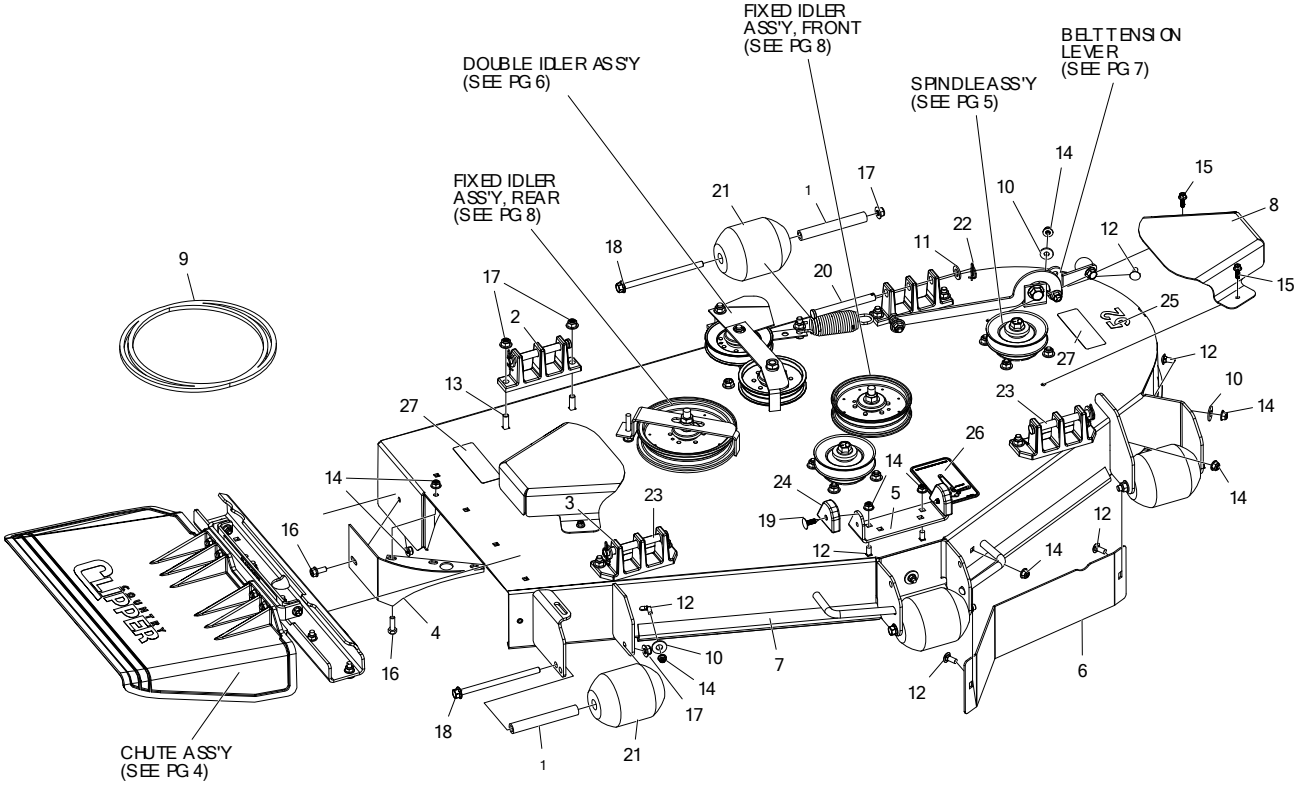

ITEM #	QTY	PART #	DESCRIPTION
1	5	609-183P	BUSHING
2	2	643-016W	DECK HANGER NARROW BASE
3	2	651-009W	DECK HANGER WIDE BASE
4	1	686-080W	SPLITTER DISCHARGE
5	1	722-034P	DECK STOP
6	1	722-041P	DEFLECTOR PLATE
7	1	722-054A	52" DECK W/ DECALS
8	2	722-033P	PULLEY COVER
9	1	D-3951	BANDL BELT B-166
10	5	F-1009-02	WASHER FLAT
11	4	F-1521	WASHER 1/2" CUSTOM YZ
12	8	F-1671	CARRIAGE BOLT 5/16-18 X 3/4" YZ, GR5
13	8	F-1672	BOLT CARRIAGE 3/8-16 X 1-1/4" YZ GR5
14	11	F-2063	NUT 5/16-18, NYLOC, FLANGED, YZ
15	4	F-2119	FHCS 1/4-20 X 3/4" YZ GR5 LOCK PATCH
16	3	F-2120	FHCS 5/16-18 X 3/4"X YZ, GR5
17	13	F-2151	NUT 3/8-16 NYLOC FLANGED YZ
18	5	F-2161	FHCS 3/18-16 X 6" YZ GR5
19	2	F-2250	CLIP FIR TREE 1/4" X 1" BLACK NYLON
20	2	F-2389	1/2" X 5" CLEVIS PIN
21	5	H-1948	ROLLER 3-3/4 DIA
22	4	H-2239	1/2" RUE RING
23	2	H-2240	1/2" X 4-1/2" CLEVIS PIN
24	2	H-3091	WEAR PAD
25	1	P-11951	DECAL DECK SIZE 52
26	1	P-12837	DECAL DECK BELT ROUTING
27	2	P-13749	DECAL, DECK SAFETY

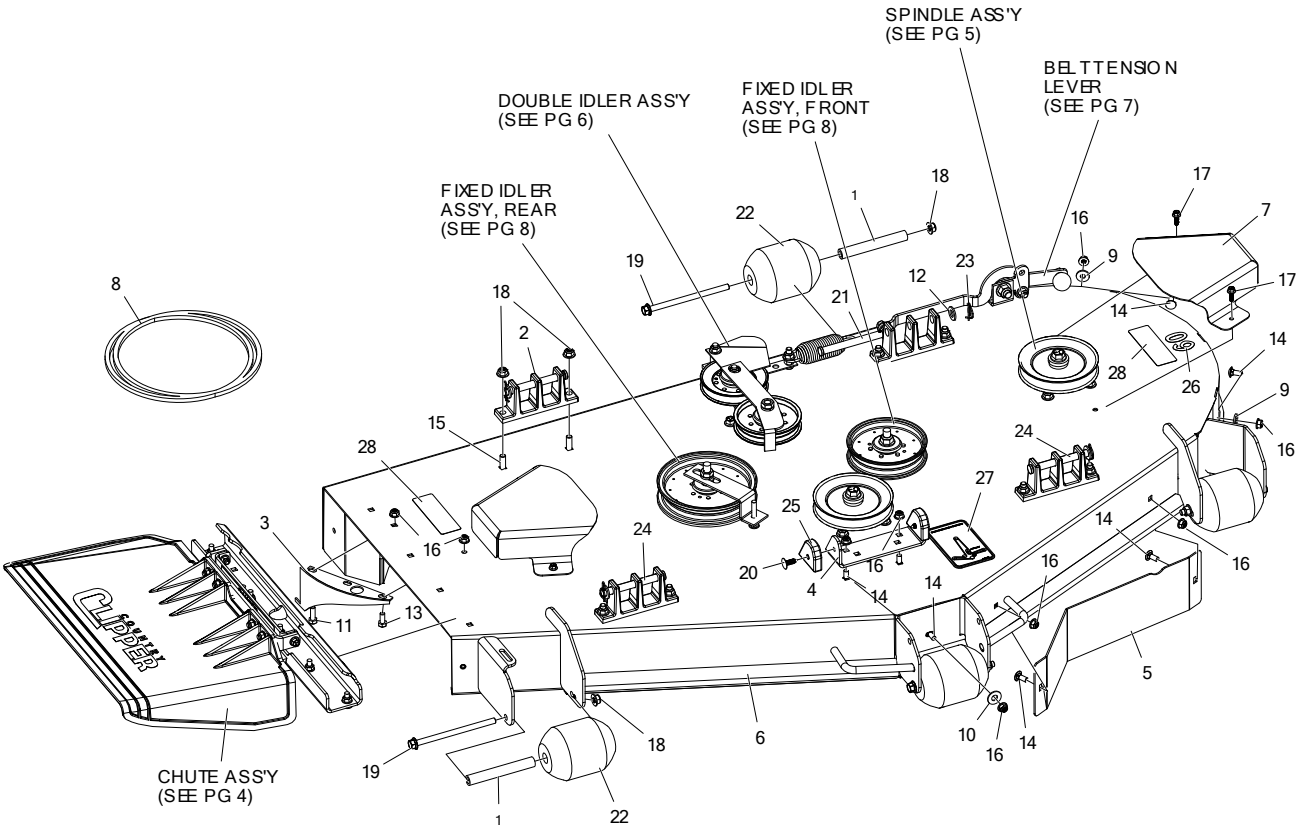

ITEM #	QTY	PART #	DESCRIPTION
1	5	609-183P	BUSHING
2	4	643-016W	DECK HANGER, NARROW BASE
3	1	686-006W	SPLITTER WELDMENT
4	1	722-034P	DECK STOP
5	1	722-041P	DEFLECTOR PLATE
6	1	722-055A	60" DECK W/ DECALS
7	2	722-033P	PULLEY COVER
8	1	D-3776-W	BELT B-180"
9	2	F-1009-02	WASHER FLAT
10	2	F-1009-03	WASHER, FLAT, 3/8, YZ
11	1	F-1015-15	HHCS, 5/16-18 X 1", YZ, GR5
12	4	F-1521	WASHER, 1/2" CUSTOM, YZ
13	1	F-1546	HHCS, 5/16-18 X 3/4"
14	8	F-1671	CARRIAGE BOLT,5/16-18 X 3/4", YZ, GR5
15	8	F-1672	BOLT, CARRIAGE, 3/8-16 X 1-1/4", YZ, GR5
16	10	F-2063	NUT, 5/16-18, NYLOC, FLANGED, YZ
17	4	F-2119	FHCS, 1/4-20 X 3/4", YZ, GR5, LOCK PATCH
18	13	F-2151	NUT, 3/8-16 NYLOC, FLANGED, YZ
19	5	F-2161	FHCS, 3/18-16 X 6" YZ, GR5
20	2	F-2250	CLIP, FIR TREE, 1/4" X 1", BLACK NYLON
21	2	F-2389	1/2" X 5" CLEVIS PIN
22	5	H-1948	ROLLER, 3-3/4 DIA
23	4	H-2239	1/2" RUE RING
24	2	H-2240	1/2" X 4-1/2" CLEVIS PIN
25	2	H-3091	WEAR PAD
26	1	P-11952	DECAL, DECK SIZE, 60
27	1	P-12837	DECAL, DECK BELT ROUTING
28	2	P-13749	DECAL, DECK SAFETY

DISCHARGE CHUTE ASS'Y
& RELATED PARTS

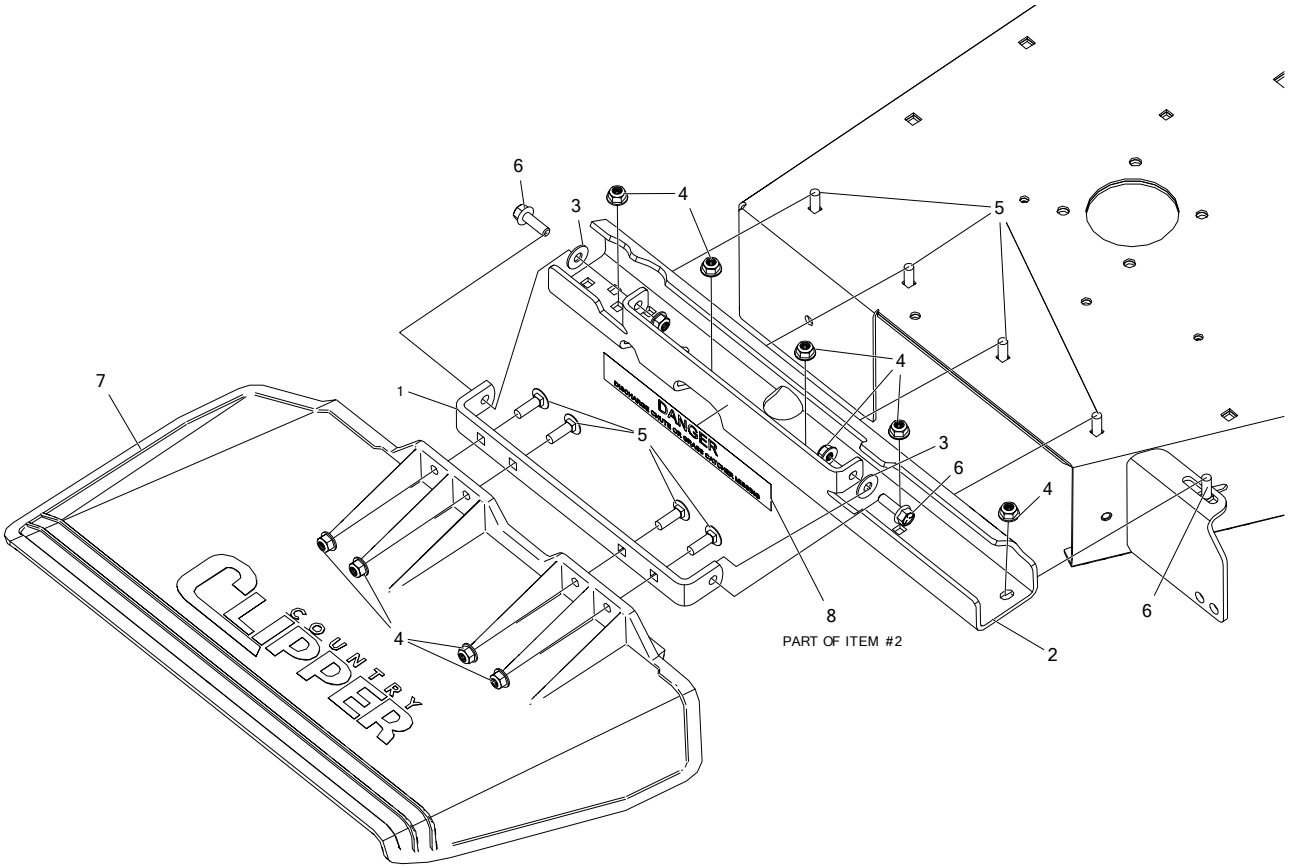

ITEM #	QTY	PART #	DESCRIPTION
1	1	643-110P	CHUTE HINGE
2	2	643-135A	OUTLET STIFFENER W/ DECALS, SMALL
3	2	F-1009-02	WASHER, FLAT
4	11	F-2063	NUT, 5/16-18, NYLOC, FLANGED, YZ
5	8	F-2066	BOLT, CARRIAGE, 5/16-18 X 1", YZ, GR5
6	3	F-2148	FHCS, 5/16-18 x 1", YZ, GR5
7	1	H-2723	CHUTE, DISCHARGE, SMALL
8	1	P-12496	DECAL, CHUTE MISSING

DECK SPINDLE ASSEMBLY {D-4020}

PARTS MARKED "*" ARE PART OF COMPLETE ASSEMBLY

BLADE PART NUMBERS

48” DECK
H-2882 HIGH LIFT W/O FUSION (STANDARD)
H-2659 LOW LIFT
H-2665 GATOR

52” DECK
H-2883 HIGH LIFT W/O FUSION (STANDARD)
H-2660 LOW LIFT
H-2666 GATOR

60” DECK
H-2885 HIGH LIFT W/O FUSION (STANDARD)
H-2661 LOW LIFT
H-2667 GATOR

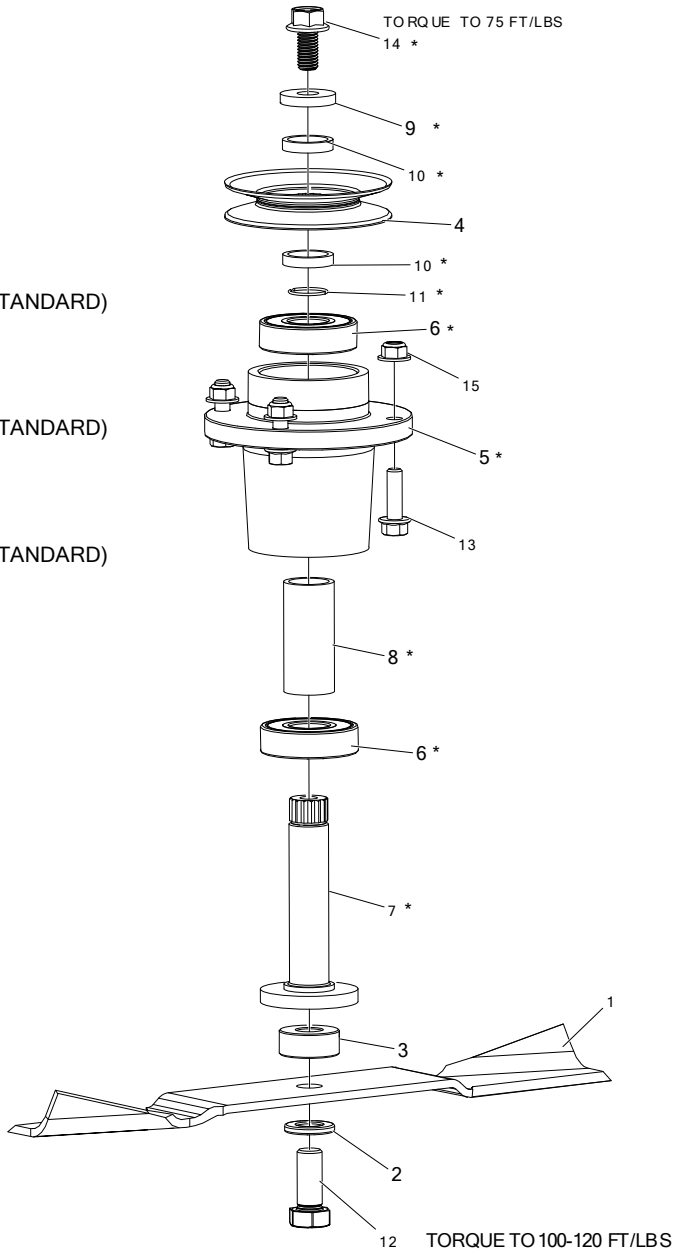

ITEM #	QTY	PART #	DESCRIPTION
1	1	H-2882	BLADE, HL, 16.928, 48 (STANDARD)
-	1	H-2883	BLADE, HL, 18.375, 52 (STANDARD)
-	1	H-2885	BLADE, HL, 20.953, 60 (STANDARD)
-	1	H-2659	BLADE, 16.928 X .63, LOW LIFT, 48
-	1	H-2660	BLADE, 18.375 X .63, LOW LIFT, 52
-	1	H-2661	BLADE, 20.953 X .63, LOW LIFT, 60
-	1	H-2665	BLADE, 16.928 X .63, GATOR, 48
-	1	H-2666	BLADE, 18.375 X .63, GATOR, 52
-	1	H-2667	BLADE, 20.86 X .63, GATOR, 60
2	1	660-099P	WASHER, BLADE, 5/8
3	1	660-206P	SPINDLE SPACER
4	1	D-3918	PULLEY, 5.195, A-B, 60" DECK
-	1	D-3920	PULLEY, 4.513, A-B, 52" DECK
-	1	D-3919	PULLEY, 4.039, A-B, 48" DECK

ITEM #	QTY	PART #	DESCRIPTION
5	1	----	SPINDLE HOUSING, MEDIUM DUTY
6	2	D-4020-2	BEARING, HCH 6305-2RS1
7	1	D-4020-3	SPINDLE SHAFT, MEDIUM DUTY
8	1	----	SPINDLE SPACER
9	1	D-4020-5	SPINDLE HARD WASHER
10	2	D-4020-6	PULLEY ALIGNMENT SPACER
11	1	D-3991	RETAINING RING
12	1	F-2344	HHCS, 5/8-11 X 1-3/4", GR5
13	4	F-2125	FHCS, 3/8-16 X 1-1/4", YZ, GR5
14	1	F-2143	FHCS, 1/2-13 X 1", YZ, GR5
15	4	F-2151	NUT, 3/8-16 NYLOC, FLANGED, YZ

DOUBLE IDLER
DRIVE BELT IDLER

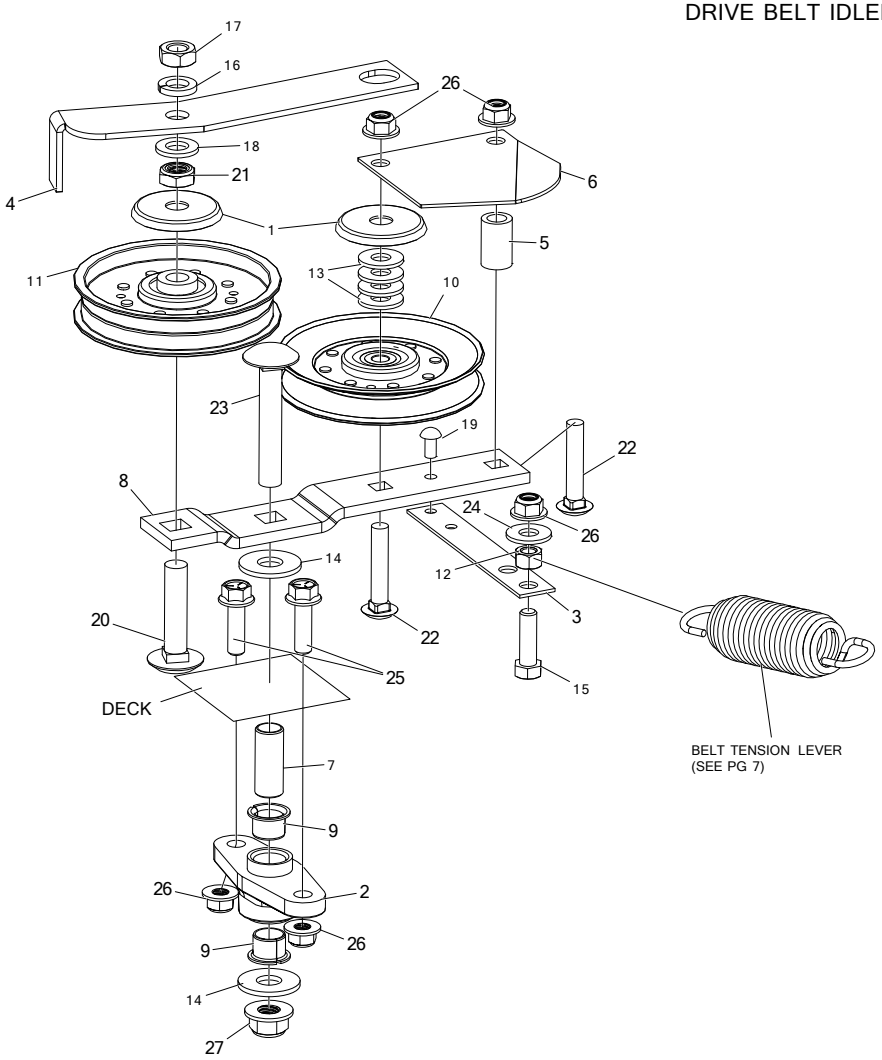

ITEM #	QTY	PART #	DESCRIPTION
1	2	620-201P	WASHER, BEARING CAP
2	1	714-488P	MOUNT, DOUBLE IDLER
3	1	660-081P	EXTENSION, SPRING
4	1	660-107P	BELT KEEPER, A BELT
5	1	668-021P	SPACER, BELT GUARD
6	1	714-183P	BELT GUARD, 54"
7	1	722-031P	MOUNTING PIN
8	1	722-032P	IDLER ARM
9	2	D-3730	BUSHING, DU 5/8 DIA X 1/2 LG
10	1	D-3923	PULLEY, V-IDLER, 4.59OD, AB, NTN
11	1	D-3924	PULLEY, FLAT IDLER, 4.25 OD, NTN, DBL INSERT
12	1	F-1005-03	NUT, 3/8-16, CENTERLOCK, YZ, GR5
13	4	F-1009-03	WASHER, FLAT, 3/8, YZ
14	2	F-1009-05	WASHER, FLAT STD, 1/2" NOMINAL, YZ
15	1	F-1307	HHCS, 3/8-16 X 1-1/4", YZ, GR5
16	1	F-1464	LOCKWASHER, 1/2"
17	1	F-1489	NUT, HEX, JAM, 1/2-13, YZ
18	1	F-1521	WASHER, 1/2" CUSTOM, YZ
19	1	F-1733	DRIVE SCREW, 1/4" X 1/2", RND HD
20	1	F-1822	BOLT, CARRIAGE, 1/2-13 X 2-1/4", YZ, GR5
21	1	F-1966	NUT, THIN, 1/2-13, NYLOC, YZ
22	2	F-1976	BOLT,CARRIAGE, 3/8-16 X 2", YZ, GR5
23	1	F-2047	CARRIAGE BOLT, 1/2-13 X 3" ZINC/YELLOW DICHROMATE FULL THREAD
24	1	F-2083	WASHER, 3/8" FENDER
25	2	F-2125	FHCS, 3/8-16 X 1-1/4", YZ, GR5
26	5	F-2151	NUT, 3/8-16 NYLOC, FLANGED, YZ
27	1	F-2152	NUT, 1/2-13 NYLOC, FLANGED, YZ

BELT TENSION LEVER

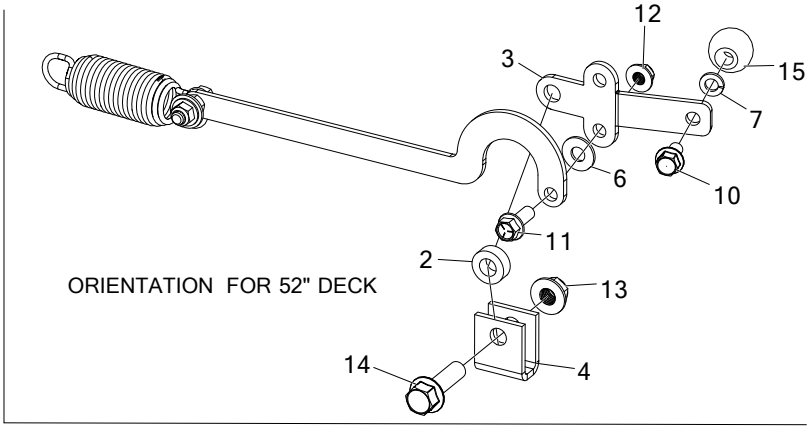

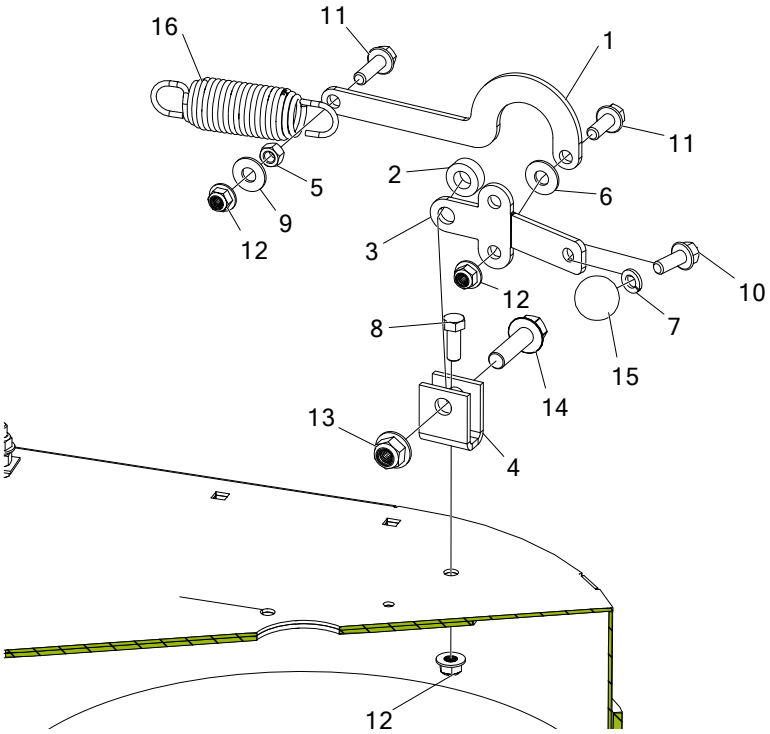

ITEM #	QTY	PART #	DESCRIPTION
1	1	722-040P	BELT TIGHTENER ARM, 52" DECK
-	1	722-044P	BELT TIGHTENER ARM, 60" DECK
-	1	660-031P	BELT TIGHTENER ARM, 48" DECK
2	1	660-038P	SPACER, 3/8" WIDE
3	1	660-184P	HANDLE, BELT TENSIONER
4	1	661-015P	SHACKLE
5	1	F-1005-03	NUT, 3/8-16, CENTERLOCK, YZ, GR5
6	1	F-1009-03	WASHER, FLAT, 3/8, YZ
7	1	F-1019-03	LOCKWASHER, HVY, 3/8, YZ
8	1	F-1394	HHCS,3/8-16NC X 1",GR.5, YELLOW PLATED
9	1	F-2083	WASHER, 3/8" FENDER
10	1	F-2124	FHCS, 3/8-16 X 3/4", YZ, GR5
11	2	F-2141	FHCS, 3/8-16 X 1
12	3	F-2151	NUT, 3/8-16 NYLOC, FLANGED, YZ
13	1	F-2152	NUT, 1/2-13 NYLOC, FLANGED, YZ
14	1	F-2154	FHCS, 1/2-13 x 1-3/4", YZ, GR5
15	1	H-2405	BALL, 1-1/4"
16	1	H-2619	SPRING, 5 X 1-1/2, TAPERED ENDS

FIXED IDLER ASSEMBLIES

6" PULLEY

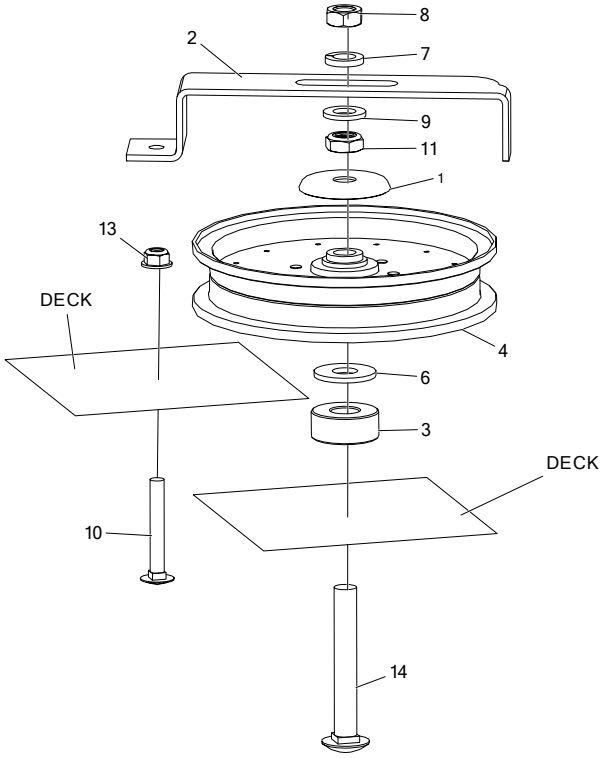

5" PULLEY

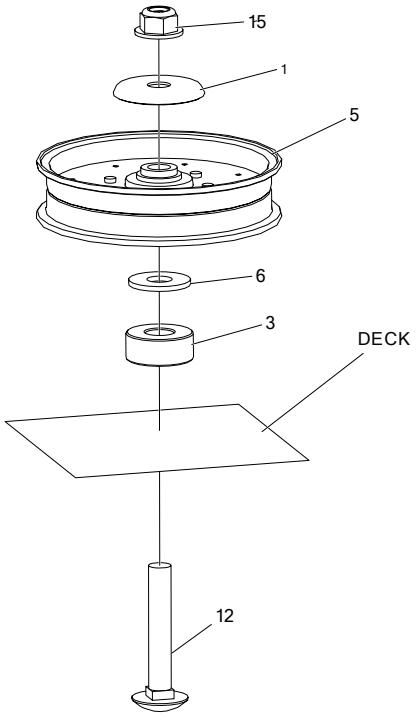

ITEM #	QTY	PART #	DESCRIPTION
1	2	620-201P	WASHER, BEARING CAP
2	1	660-112P	BELT KEEPER, 48 AND 52" DECK
-	1	660-114P	BELT KEEPER, 60" DECK
3	2	660-206P	SPINDLE SPACER
4	1	D-3903	PULLEY, FLAT IDLER, 6" (NTN)
5	1	D-3904	PULLEY, FLAT IDLER, 5"
6	2	F-1009-05	WASHER, FLAT STD, 1/2" NOMINAL, YZ
7	1	F-1464	LOCKWASHER, 1/2"
8	1	F-1489	NUT, HEX, JAM, 1/2-13, YZ
9	1	F-1521	WASHER, 1/2" CUSTOM, YZ
10	1	F-1707	CARRIAGE BOLT, 5/16-18 X 2-1/4 ZINC PLATED
11	1	F-1966	NUT, THIN, 1/2-13, NYLOC, YZ
12	1	F-2047	CARRIAGE BOLT, 1/2-13 X 3" ZINC/YELLOW DICHROMATE FULL THREAD
13	1	F-2063	NUT, 5/16-18, NYLOC, FLANGED, YZ
14	1	F-2106	BOLT, CARRIAGE, 1/2-13 X 3-1/2", YZ, GR5
15	1	F-2152	NUT, 1/2-13 NYLOC, FLANGED, YZ

DECK LIFT ASSEMBLY & RELATED PARTS

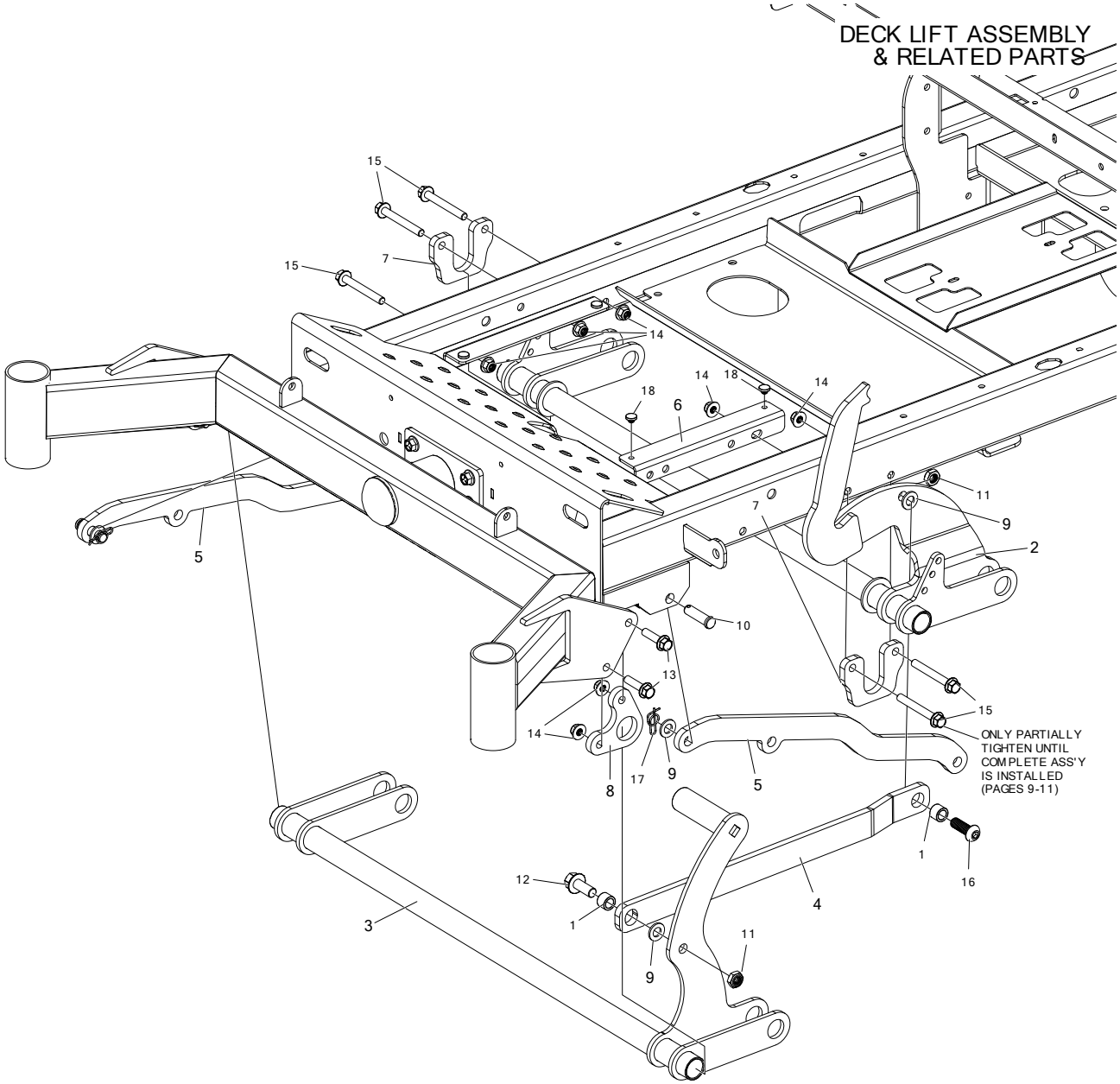

ITEM #	QTY	PART #	DESCRIPTION
1	2	720-010P	CLAMP EXTENSION
2	1	720-079W	WLDT, DECK LIFT, REAR
3	1	720-133W	WLDT, DECK LIFT, FRONT
4	1	720-090P	DECK LIFT LINK
5	2	720-093P	DRAG BAR
6	2	720-094P	FLOOR PAN SUPPORT
7	2	724-032P	DECK PIVOT MOUNT PLATE
8	2	724-033P	DECK SUSPENSION FRONT PLATE
9	4	F-1521	WASHER, 1/2" CUSTOM, YZ
10	2	F-1896	CLEVIS PIN, 1/2 X 1-3/4", YZ
11	2	F-1966	NUT, THIN, 1/2-13, NYLOC, YZ
12	1	F-2127	FHCS, 1/2-13 X 1-1/4", YZ, GR5
13	4	F-2147	FHCS, 3/8-16 X 1-1/2", YZ, GR5
14	9	F-2151	NUT, 3/8-16 NYLOC, FLANGED, YZ
15	5	F-2180	FHCS, 3/8-16 x 3", YZ, GR5
16	1	F-2278	BUTTON SHCS, 1/2-13 X 1-1/2, YZ
17	2	H-2239	1/2" RUE RING
18	4	H-2461	RUBBER BUMPER

DECK LIFT ASSEMBLY & RELATED PARTS (CON'T)

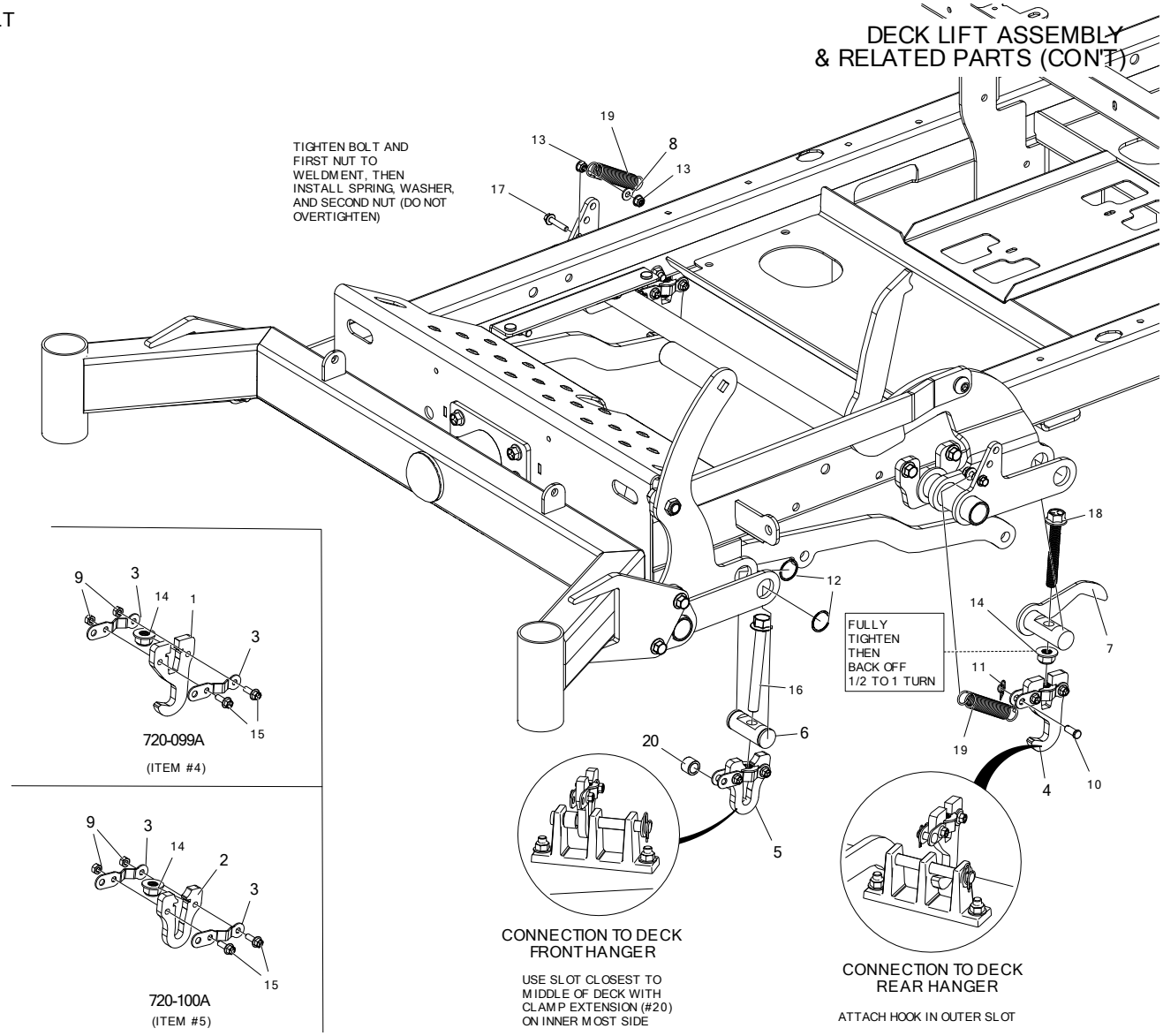

ITEM #	QTY	PART #	DESCRIPTION
1	2	720-096P	DECK HANGER, REAR
2	2	720-097P	DECK HANGER, FRONT
3	8	720-098P	NUT RETAINER
4	2	720-099A	ASS'Y, DECK HANGER, REAR
5	2	720-100A	ASS'Y, DECK HANGER, FRONT
6	2	724-052P	HANGER PIN, FRONT
7	1	724-091W	HANGER PIN WLDT, REAR LH
-	1	724-092W	HANGER PIN WLDT, REAR RH
8	2	F-2097	WASHER, FENDER, 1/4" X 7/8"
9	8	F-1158	NUT, CENTERLOCK, 1/4-20, YZ, GR5
10	2	F-1443	CLEVIS PIN, 5/16 X 7/8"
11	2	F-1492	RUE RING, 5/16
12	4	F-1998	SPIROL RING 1"
13	4	F-2132	NUT, 1/4-20 NYLOC, FLANGED, YZ
14	6	F-2152	NUT, 1/2-13 NYLOC, FLANGED, YZ
15	8	F-2162	FHCS, 1/4-20 X 3/4", YZ, GR5
16	2	F-2181	FHCS, 1/2-13 X 4.50, YZ, GR8
17	2	F-2182	FHCS, 1/4-20 X 1-1/4", YZ, GR5
18	2	F-2277	FHCS 1/2-13 X 3-1/2, GR5, YZ, FULL THREAD
19	2	H-1635	SPRING, EXT, 3/4" OD X 4" OAL
20	2	720-010P	CLAMP EXTENSION

CUT HEIGHT ASSEMBLY & RELATED PARTS

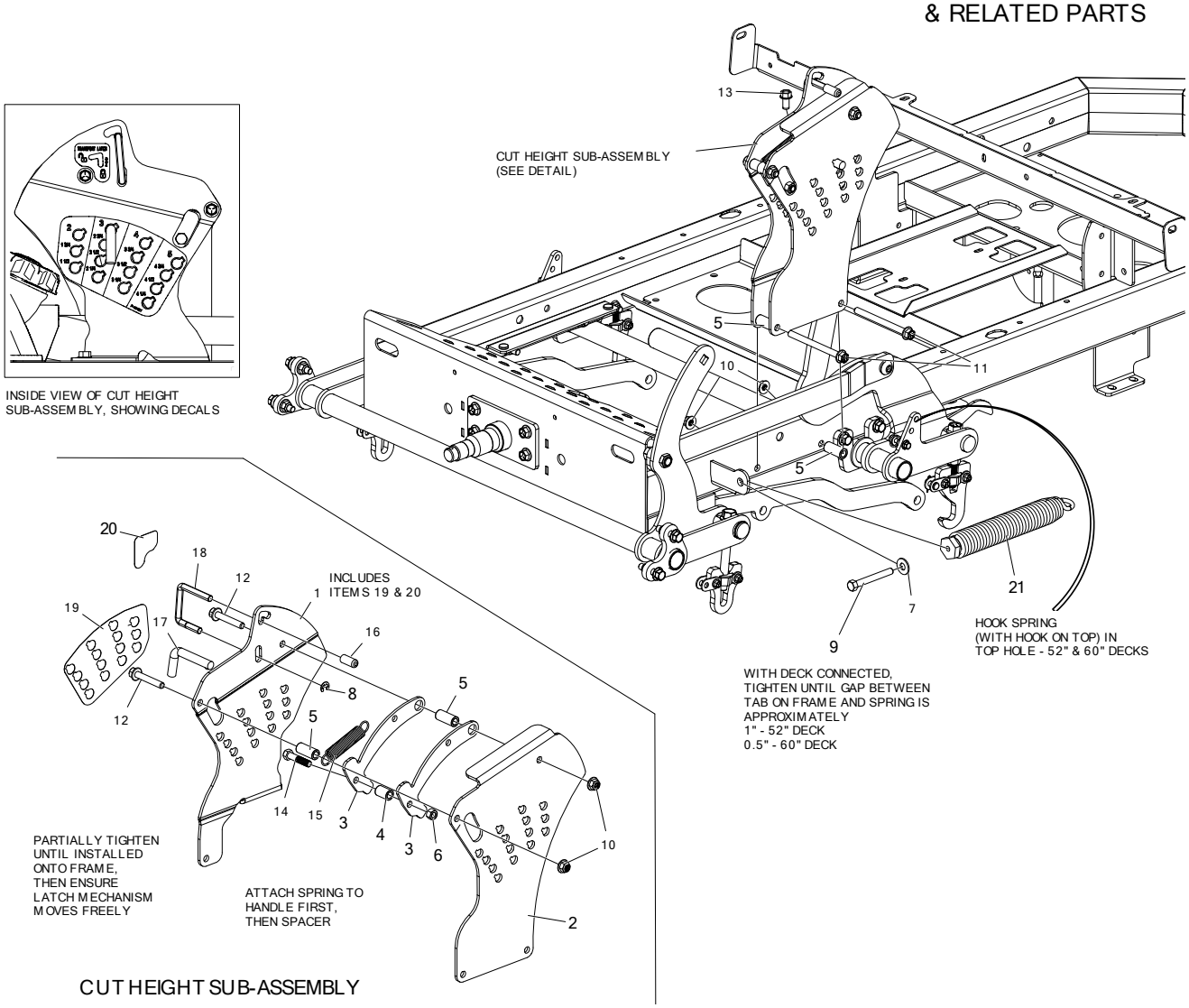

ITEM #	QTY	PART #	DESCRIPTION
1	1	720-134A	PLATE, CUT HEIGHT - INNER W/ DECALS
2	1	720-105P	PLATE, CUT HEIGHT - OUTER
3	2	724-042P	CATCH PLATE
4	1	724-079P	SPACER, CATCH PLATE
5	4	724-080P	SPACER, CUT HEIGHT PLATE
6	1	F-1005-03	NUT, 3/8-16, CENTERLOCK, YZ, GR5
7	1	F-1009-03	WASHER, FLAT, 3/8, YZ
8	1	F-1080	SNAP RING TRUARC #5144-37 3/8 HEAVY E-RING
9	1	F-1329	SCREW,3/8-16 X 3 GR5 FULL THREADED, PLATED
10	4	F-2151	NUT, 3/8-16 NYLOC, FLANGED, YZ
11	2	F-2160	FHCS, 3/8-16 X 4-1/2", YZ, GR5
12	2	F-2218	FHCS, 3/8-16 X 2-1/4", YZ, GR5
13	1	F-2219	HFCS, 3/8-16 X 3/4", CZ, THD FORMING
14	1	F-2260	HHCS, 3/8-16 X 1-3/4, YZ, GR8
15	1	H-1635	SPRING, EXT, 3/4" OD X 4" OAL
16	1	H-2327	3/8 DIA X 1"LONG END CAP
17	1	H-3013	DECK HEIGHT PIN
18	1	H-3120	TRANSPORT LATCH RELEASE HANDLE
19	1	P-13421	DECAL, CUT HEIGHT
20	1	P-13437	DECAL, TRANSPORT LATCH
21	1	H-3117	EXTENSION SPRING, 1.585 O.D. x (9.8) LONG, W/THREADED PLUG

PIVOTING FRONT AXLE & FLOOR PAN

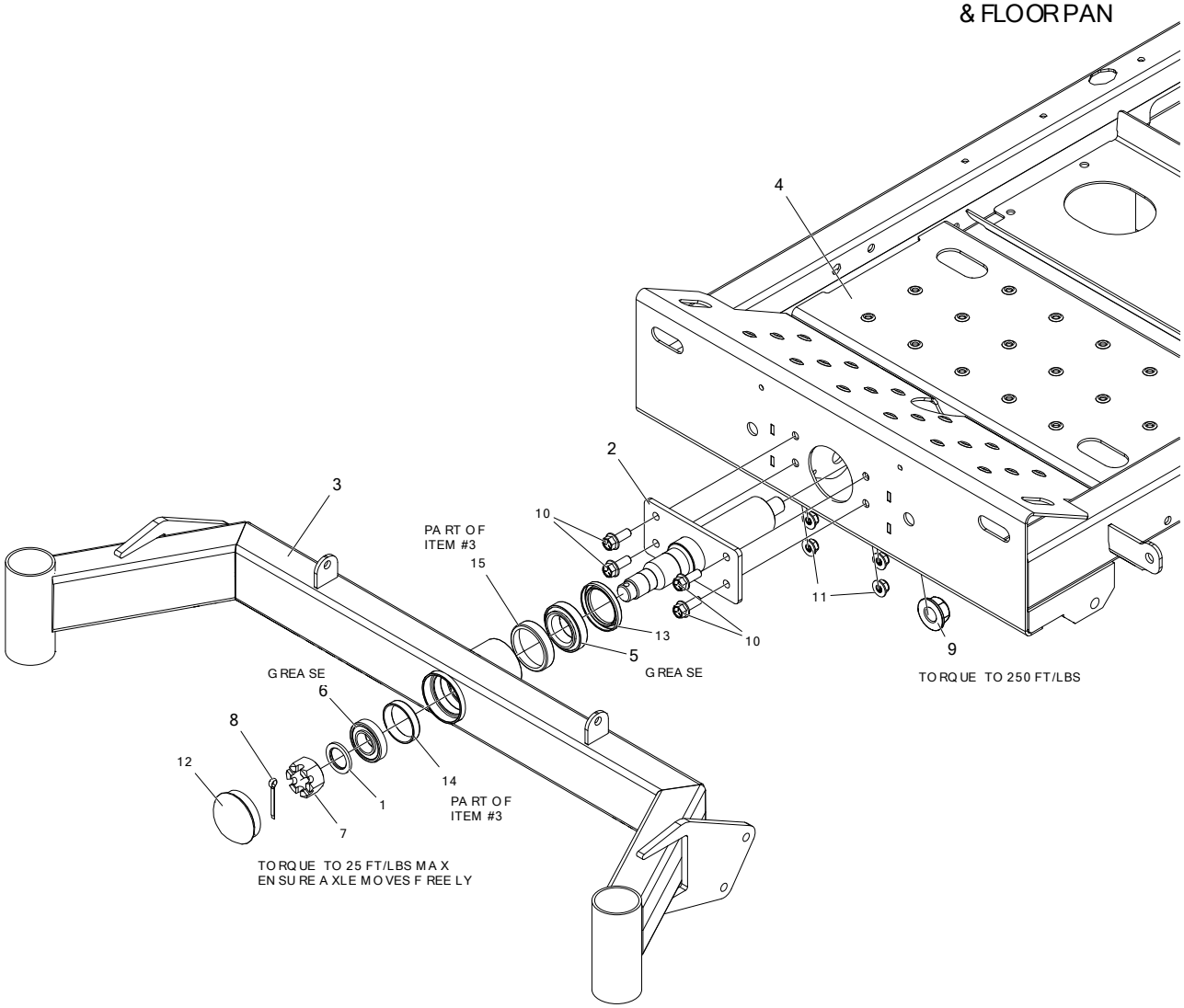

ITEM #	QTY	PART #	DESCRIPTION
1	1	606-303P	WASHER, 10GA GALVANIZED
2	1	724-056W	WLDT, PIVOT SHAFT
3	1	720-160W	WLDT, FRONT AXLE, RED
4	1	720-095P	FLOOR PAN
5	1	D-3825-01	TRB, BEARING CONE
6	1	D-2018-01	BEARING CONE
7	1	F-1724	NUT, HEX, SLOTTED, 1-14, YZ
8	1	F-1728	COTTER PIN, 3/16 X 2", YZ
9	1	F-2078	NUT, 3/4-16, TOP LOCK, GR-GT, YZ
10	4	F-2141	FHCS, 3/8-16 X 1", YZ, GR5
11	4	F-2151	NUT, 3/8-16 NYLOC, FLANGED, YZ
12	1	H-1924	GREASE CAP PLATED
13	1	H-2812	SEAL, SHAFT, 1.75, 2.38, 0.313
14	1	D-2019-01	BEARING CUP
15	1	D-3825-02	BEARING CUP

TIRES & FRONT STEP

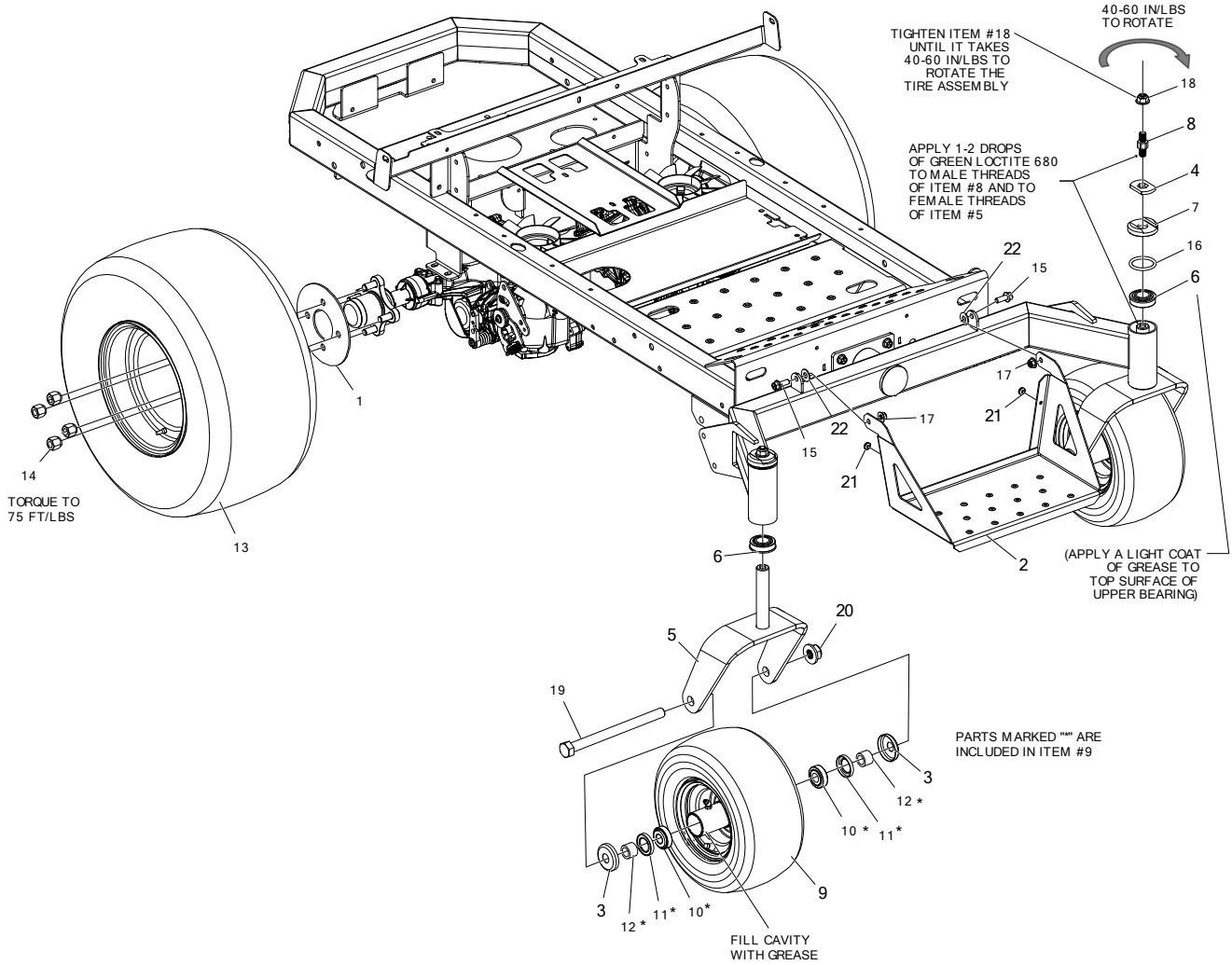

ITEM #	QTY	PART #	DESCRIPTION
1	2	659-092P	WHEEL BACKING PLATE
2	1	663-134P	STEP, EXTENDED
3	4	663-221P	CAP, WHEEL BEARING
4	2	714-589P	CASTER BRAKE DRIVE WASHER
5	2	721-022W	WLDT, CASTER YOKE
6	4	D-2008-02	BEARING, SPD, SF-16-32
7	2	H-3267	CASTER BRAKE CAP
8	2	H-3268	CASTER BRAKE, ADJUSTER STUD
9	5	D-4021	TIRE ASS'Y, FLAT BLACK, SMOOTH, 13 X 6.5-6
10	2	D-4021-4	TAPER ROLLER BEARING, LM11949/11910
11	2	D-4021-5	GREASE SEAL, S17828001
12	2	D-4021-6	SPACER, SPCR005
13	2	D-4033	TIRE ASS'Y, 22 X 11-10, TURF, BLACK, (52” & 60” DECKS)
-	2	D-4034	TIRE ASS'Y, 22 X 9.5-10, BLACK, (48” DECK ONLY)
14	8	F-1499	LUG NUT, 1/2-20, YZ
15	2	F-2141	FHCS, 3/8-16 X 1", YZ, GR5
16	2	D-4217	CASTER BRAKE, O-RING
17	2	F-2151	NUT, 3/8-16 NYLOC, FLANGED, YZ
18	2	F-2152	NUT, 1/2-13 NYLOC, FLANGED
19	2	F-2194	HHCS, 3/4-10 X 9-1/2”, YZ, GR5
20	2	F-2195	NUT, FLANGE NYLOC, YZ
21	2	H-2461	RUBBER BUMPER
22	2	F-1009-03	WASHER, FLAT, 3/8”, YZ

FRONT PANEL & RELATED PARTS

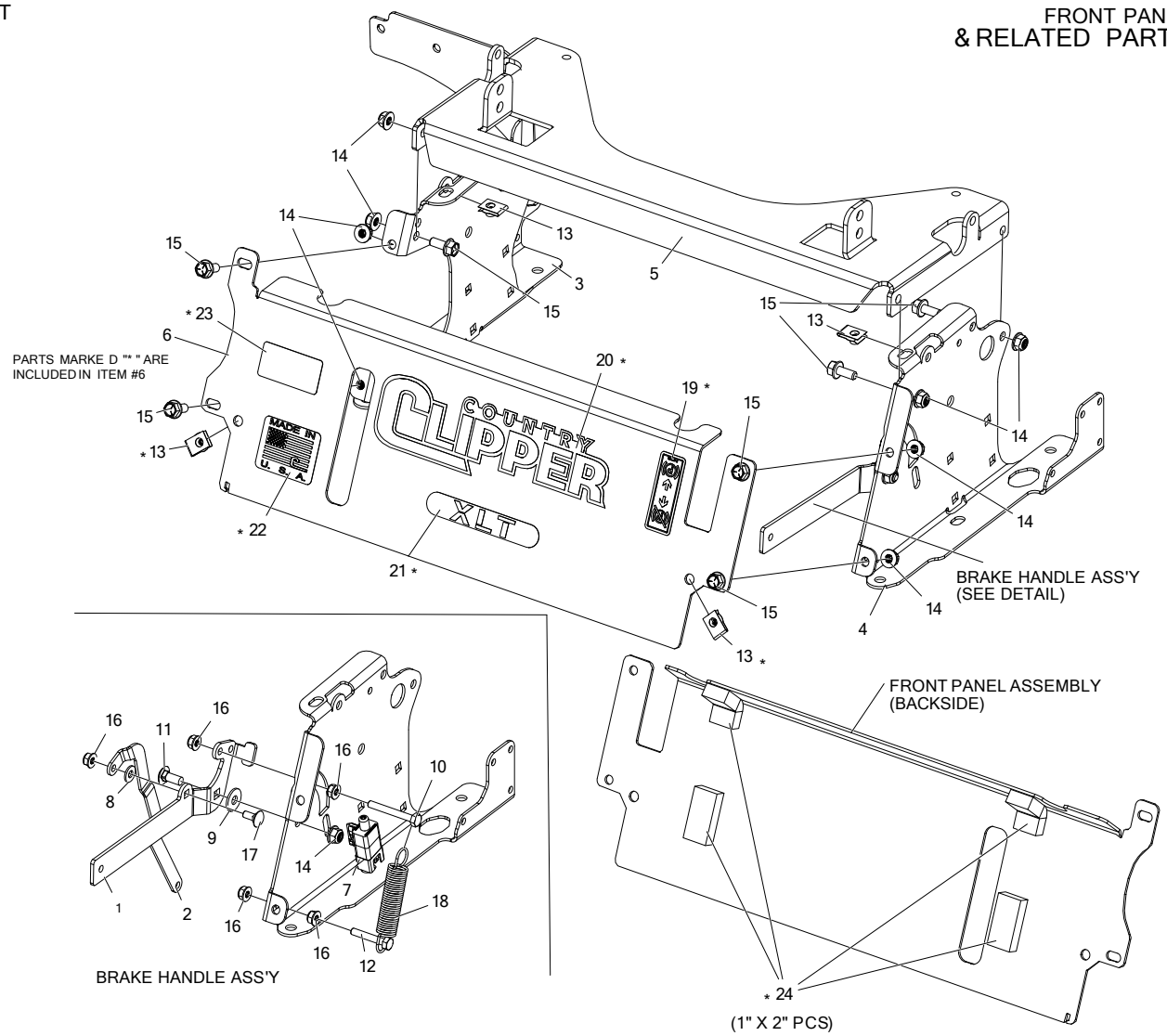

ITEM #	QTY	PART #	DESCRIPTION
1	1	714-503P	BRAKE HANDLE, OFFSET
2	1	714-512P	BRAKE LINK
3	1	714-532P	SIDE PANEL, RH
4	1	714-538P	SIDE PANEL, LH
5	1	714-536P	SEAT MOUNT, HINGED
6	1	720-164A	FRONT PANEL W/DECALS, (XLT)
7	1	E-6872	PLUNGER SWITCH, RAIL MOUNT (NO/NO)
8	1	F-1009-01	FLAT WASHER, 1/4", YZ
9	1	F-1009-02	WASHER, FLAT, 5/16
10	1	F-1015-09	HHCS, 1/4-20 X 2", YZ, GR5
11	1	F-1671	CARRIAGE BOLT,5/16-18 X 3/4", YZ, GR5
12	1	F-1716	CAPSCREW, 1/4-20 X 1-1/2, GR5, YZ

ITEM #	QTY	PART #	DESCRIPTION
13	4	F-1858	U-NUT, 1/4-20
14	9	F-2063	NUT, 5/16-18, NYLOC, FLANGED, YZ
15	8	F-2120	FHCS, 5/16-18 X 3/4", YZ, GR5
16	5	F-2132	NUT, 1/4-20 NYLOC, FLANGED, YZ
17	1	F-2155	BOLT, CARRIAGE, 1/4-20 X 5/8", YZ, GR5
18	1	H-1635	SPRING, EXT, 3/4" OD X 4" OAL
19	1	P-11382	DECAL, PARK BRAKE
20	1	P-13312	DECAL, LOGO, CHROME w/BLK, LG
21	1	P-13365	DECAL, XLT
22	1	P-13000	DECAL, MADE IN USA
23	1	P-13748	DECAL, FUEL SAFETY
24	4	H-2990	NEOPRENE FOAM (ADHESIVE) 1/2"

FRONT PANEL ASS'Y & RELATED PARTS (CON'T)

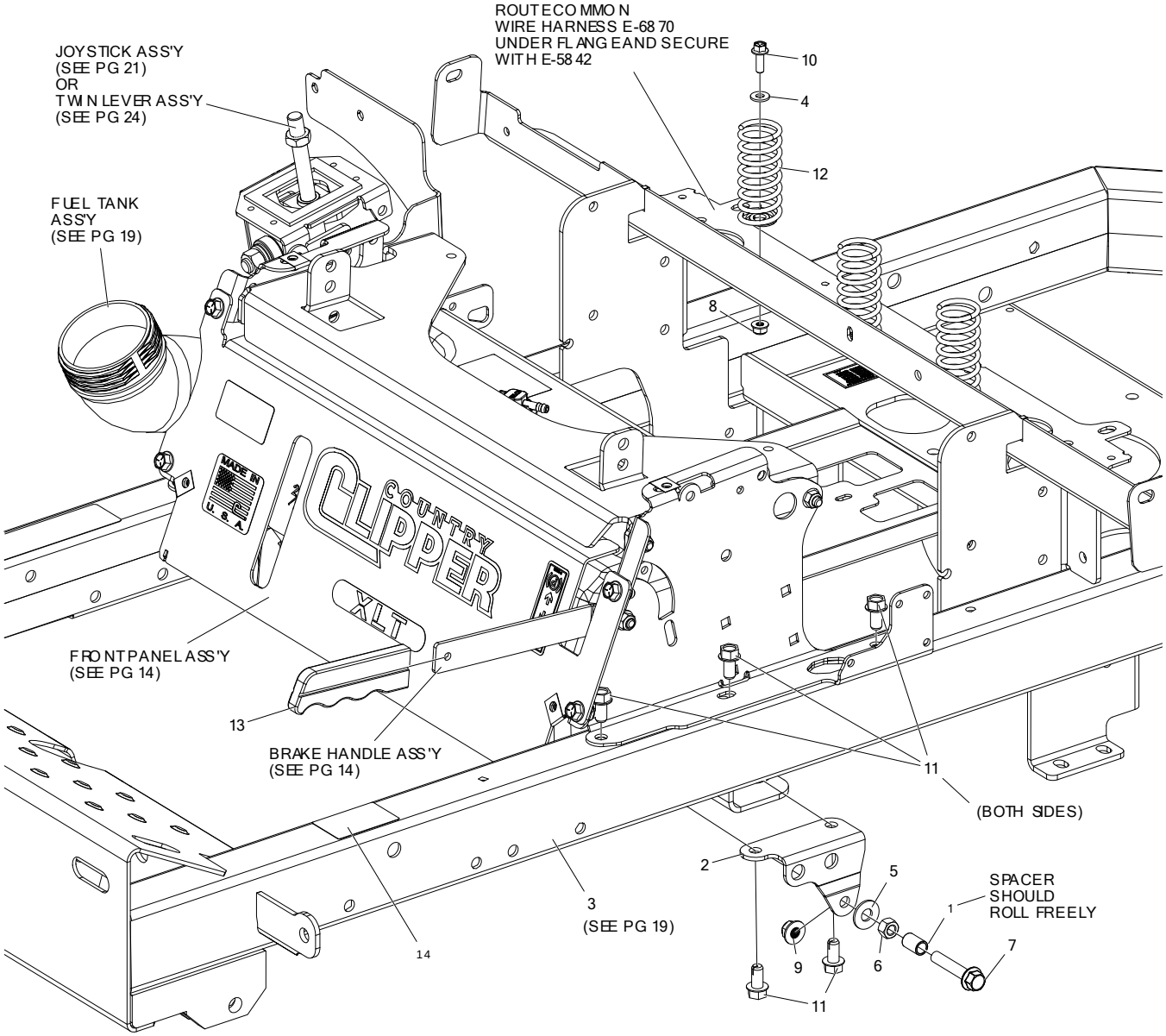

ITEM #	QTY	PART #	DESCRIPTION
1	2	707-073P	STAND-OFF, LINKAGE MOUNT
2	1	714-473P	BRACKET, DECK FLIP & BRAKE, ROD HANGER, LH
-	1	714-501P	BRACKET, DECK FLIP & BRAKE, ROD HANGER, RH
3	1	720-162A	WLDT, FRAME, W/ DECALS
4	3	F-1009-01	FLAT WASHER, 1/4", YZ
5	2	F-1009-03	WASHER, FLAT, 3/8, YZ
6	2	F-1011-03	NUT, HEX, 3/8-16, YZ
7	2	F-2126	FHCS, 3/8-16 X 2”, YZ, GR5
8	3	F-2132	NUT, 1/4-20 NYLOC, FLANGED, YZ
9	2	F-2151	NUT, 3/8-16, NYLOC, FLANGED
10	3	F-2162	FHCS, 1/4-20 X 3/4", YZ, GR5
11	10	F-2219	HFCS, 3/8-16 X 3/4", CZ, THD FORMING
12	3	H-1920	SPRING, SEAT
13	1	H-1926	1/4" X 1" HANDLE GRIP
14	1	P-13830	DECAL, QR CODE, STAND-UP DECK

BATTERY & SOLENOID

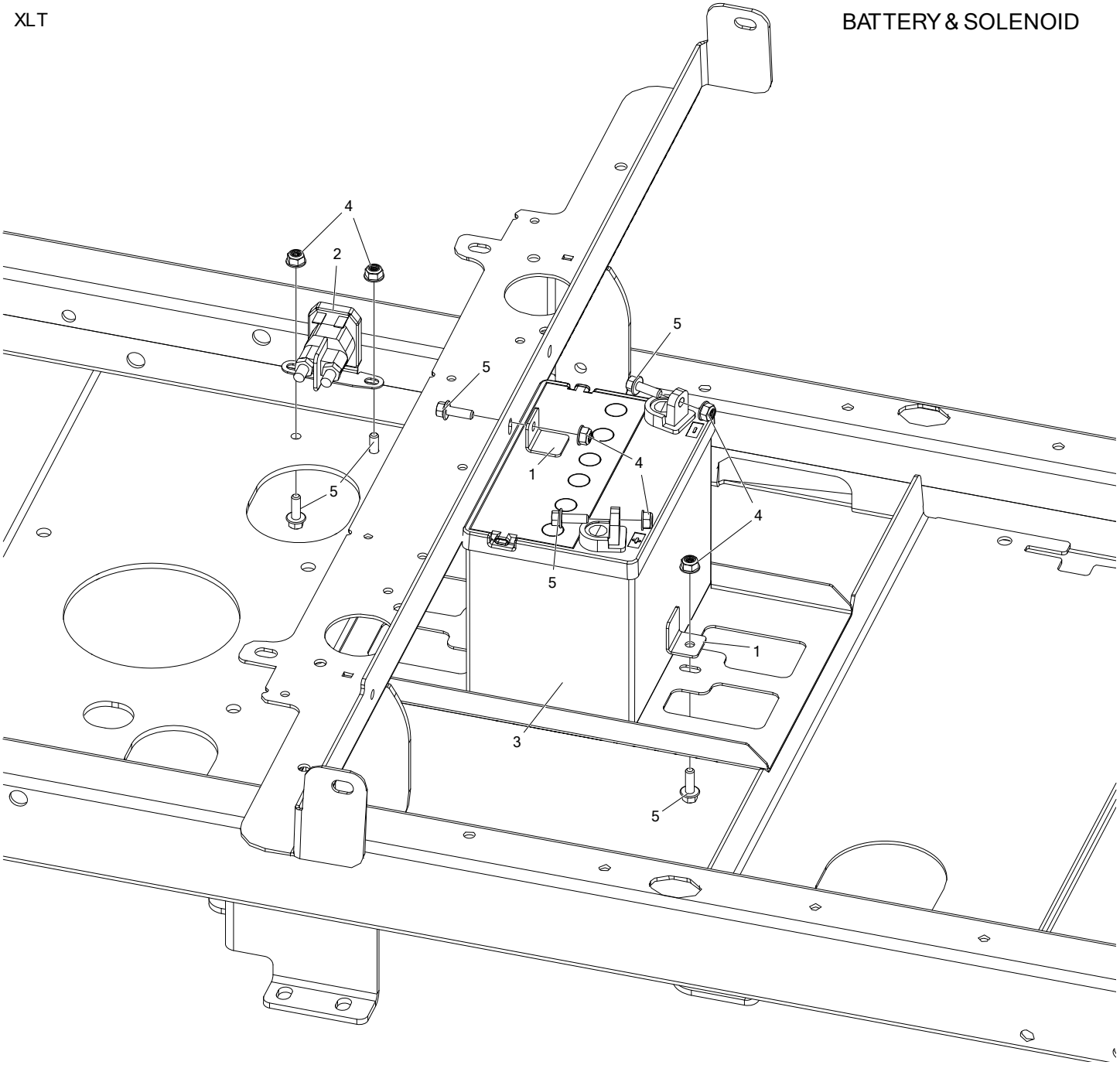

ITEM #	QTY	PART #	DESCRIPTION
1	2	714-513P	BATTERY CLIP
2	1	E-6612	SOLENOID 12V STARTER, 4 TERM.
3	1	E-6659	BATTERY, YPS 35
4	6	F-2132	NUT, 1/4-20 NYLOC, FLANGED, YZ
5	6	F-2162	FHCS, 1/4-20 X 3/4", YZ, GR5

BRAKE ASSEMBLY

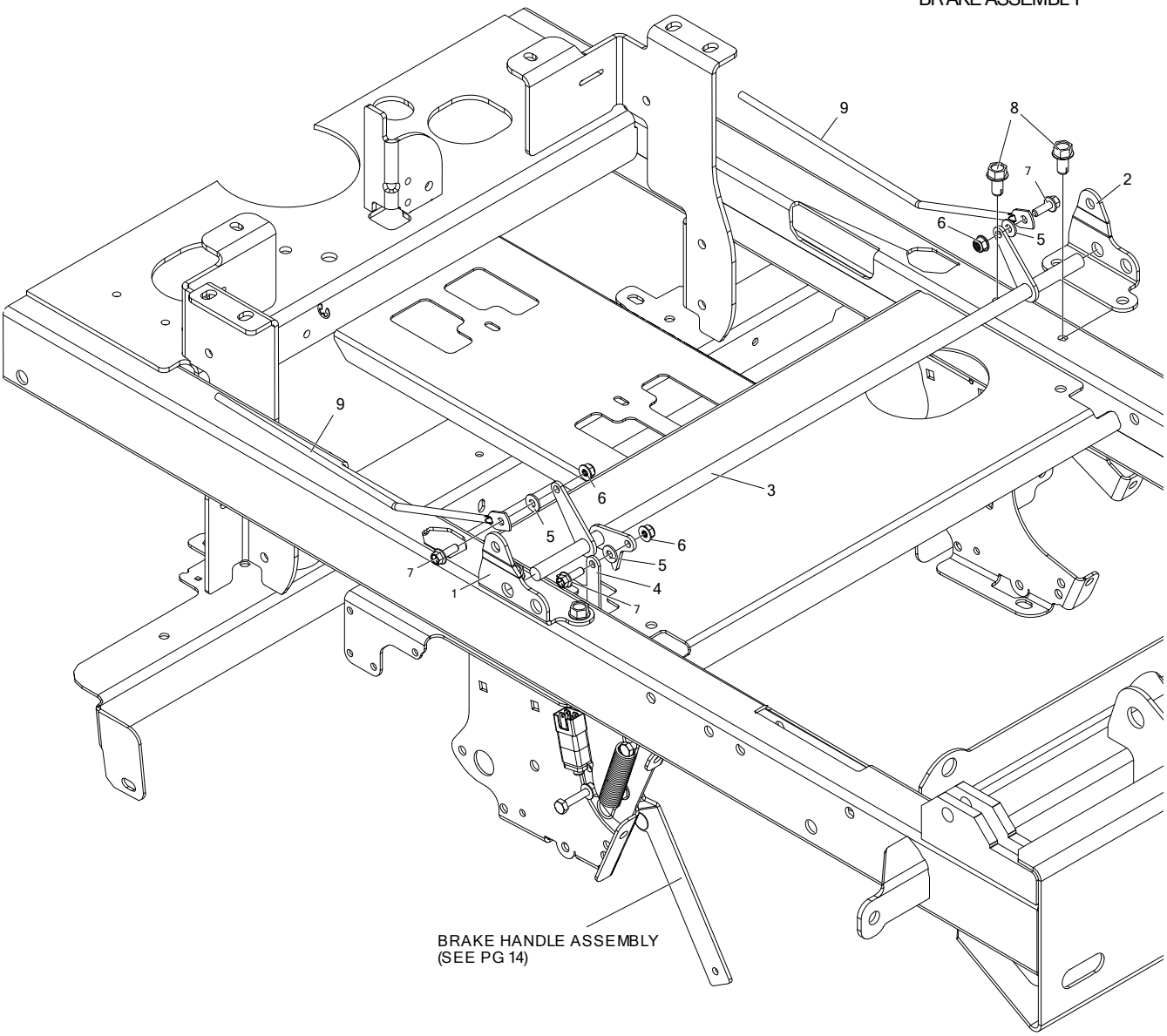

ITEM #	QTY	PART #	DESCRIPTION
1	1	714-473P	BRACKET, DECK FLIP & BRAKE ROD HANGER, LH
2	1	714-501P	BRACKET, DECK FLIP & BRAKE ROD HANGER, RH
3	1	714-511W	WLDT, BRAKE ROD
4	1	714-512P	BRAKE LINK
5	3	F-1009-01	FLAT WASHER, 1/4", YZ
6	3	F-2132	NUT, 1/4-20 NYLOC, FLANGED, YZ
7	3	F-2162	FHCS, 1/4-20 X 3/4", YZ, GR5
8	4	F-2219	HFCS, 3/8-16 X 3/4", CZ, THD FORMING
9	2	H-3250	BRAKE LINK ROD

BRAKE ASSEMBLY (CON'T)

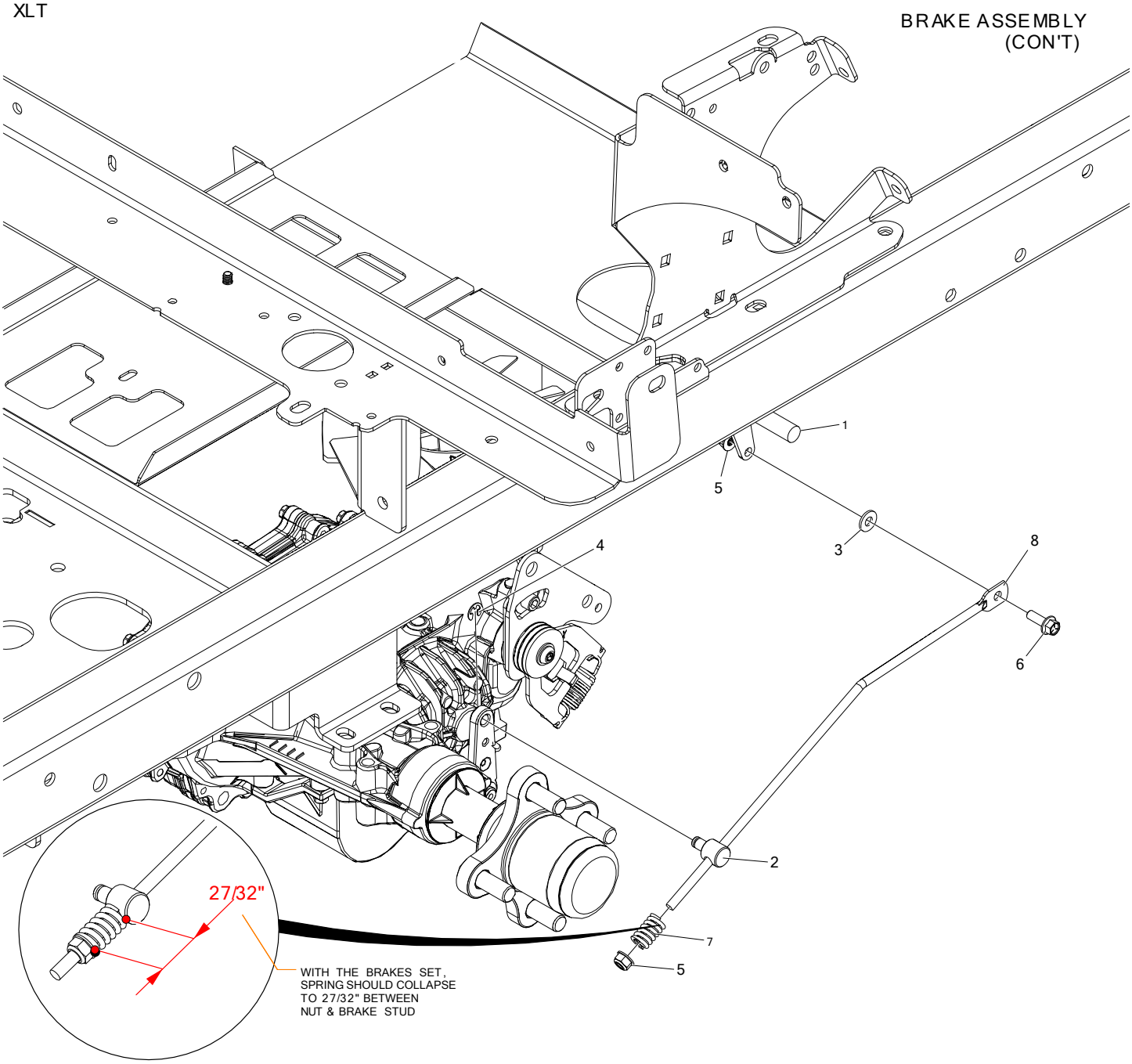

ITEM #	QTY	PART #	DESCRIPTION
1	1	714-511W	WLDT, BRAKE ROD
2	2	714-522P	BRAKE STUD
3	2	F-1009-01	FLAT WASHER, 1/4", YZ
4	2	F-1610	RETAINING RING, EXTERNAL
5	2	F-2132	NUT, 1/4-20 NYLOC, FLANGED, YZ
6	2	F-2162	FHCS, 1/4-20 X 3/4", YZ, GR5
7	2	H-2786	SPRING, COMP, 0.562 X 0.88 HGT
8	2	H-3250	BRAKE LINK ROD

FUEL TANK ASSEMBLY

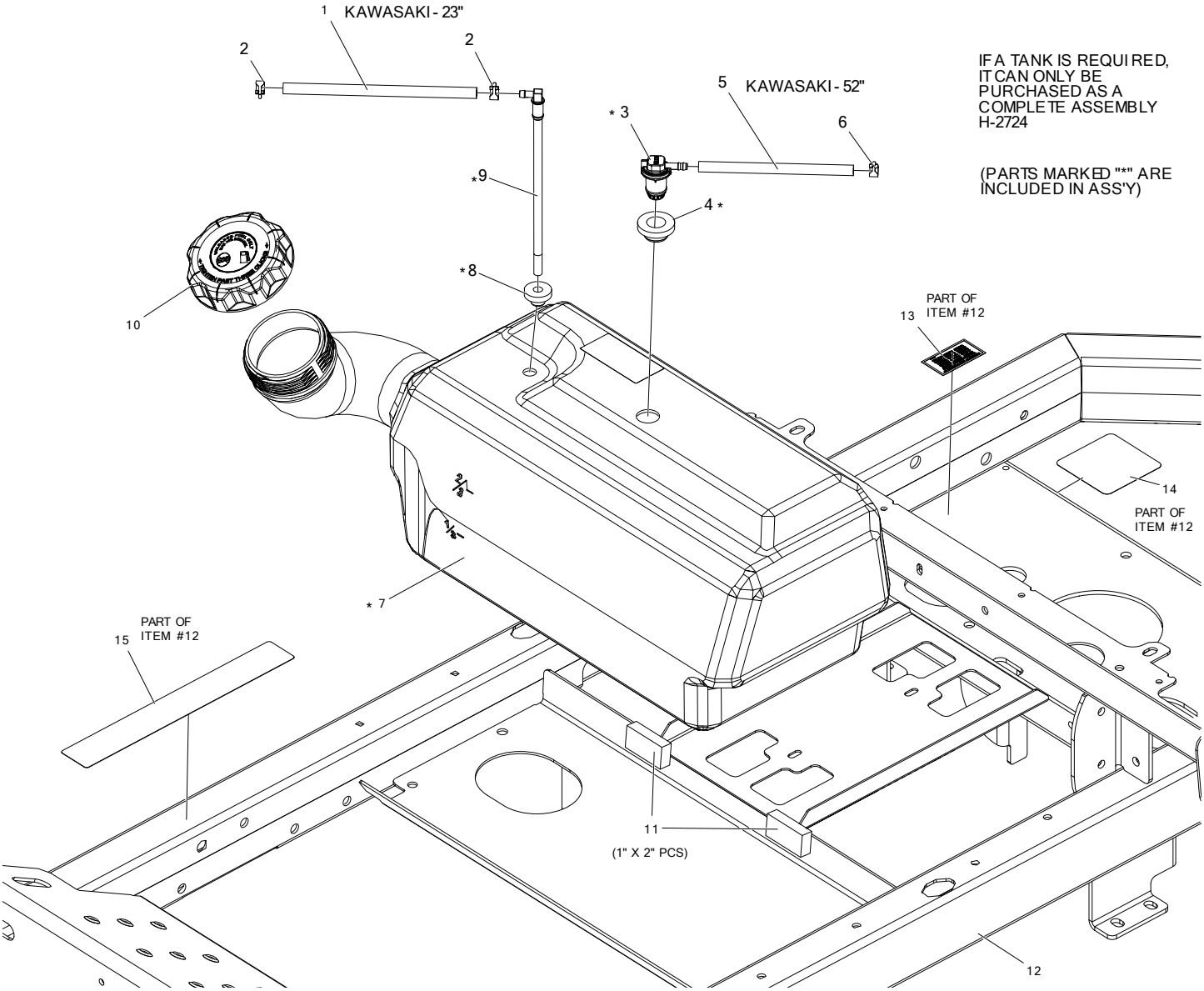

ITEM #	QTY	PART #	DESCRIPTION
1	1	H-1648	FUEL LINE, 1/2" O.D., 1/4" I.D.
2	2	H-1687	1/2 O.D. HOSE SPRING CLAMP
3	1	H-2831	REMOTE VENT
4	1	H-2679	REMOTE VENT GROMMET
5	1	H-2697	HOSE, FUEL LINE .188 ID X .406 OD
6	1	H-2698	CLAMP, .406 OD FUEL LINE
7	1	H-2724	ASSEMBLY, FUEL TANK, SMALL
8	1	H-2741	GROMMET, PICK UP TUBE
9	1	H-2742	PICK UP TUBE
10	1	H-3236	RATCHET CAP, W/ SS TETHER, 3.5 DIA
11	2	H-2990	WEATHER-RESISTANT NEOPRENE FOAM (ADHESIVE) 1/2"
12	1	720-162A	WLDT, FRAME W/ DECALS
13	1	P-10777	PATENT DECAL
14	1	P-12918	DECAL, HYDRO BELT ROUTING
15	1	P-13751	DECAL, SAFETY

JOYSTICK CONTROL & RELATED PARTS

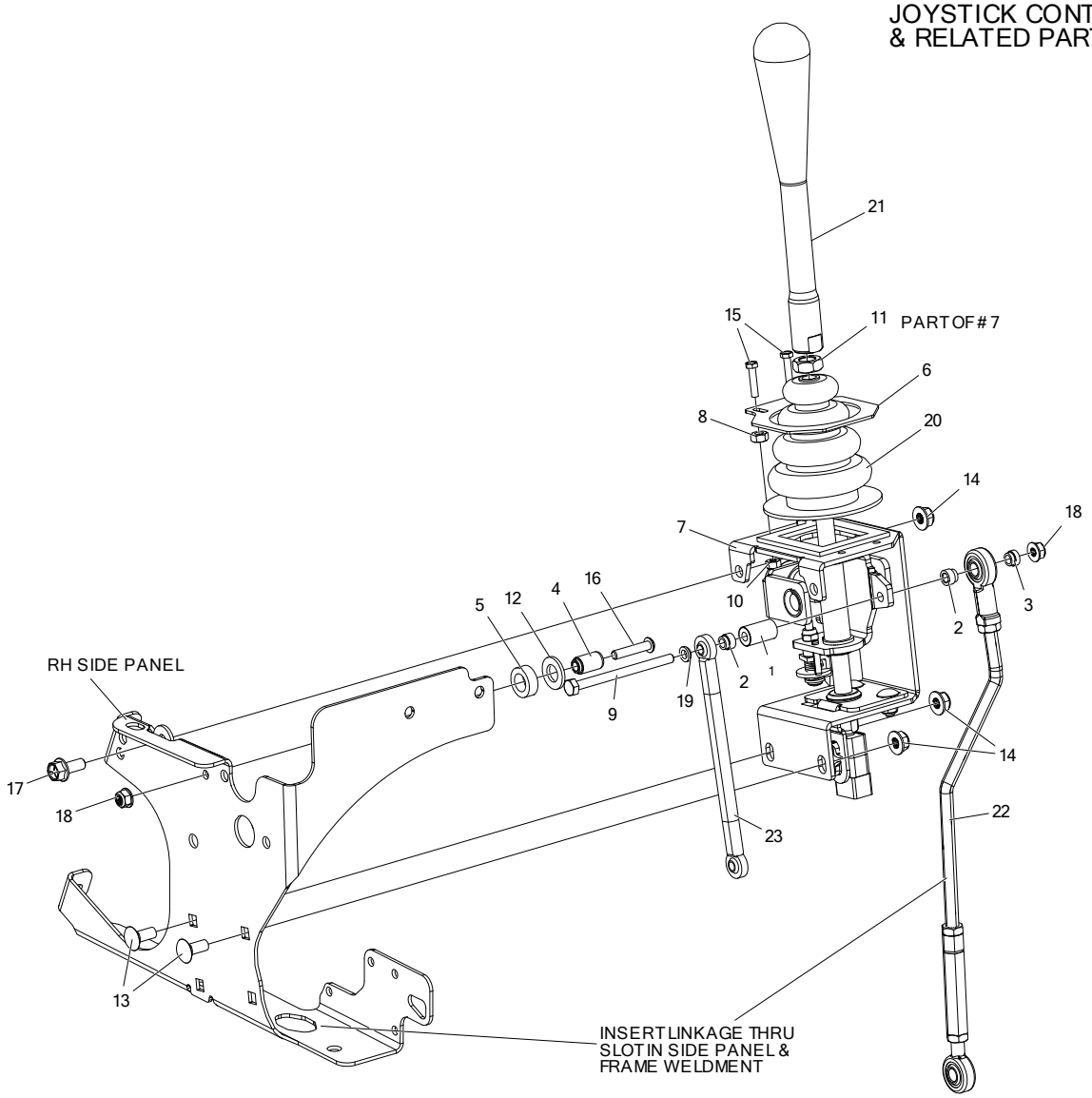

ITEM #	QTY	PART #	DESCRIPTION
1	1	625-100P	TUBE, PIVOT, JOYSTICK
2	2	625-107P	BUSHING, .375 ROD END
3	1	625-116P	BUSHING, .375 ROD END, SHORT
4	1	714-544P	PIVOT PIN
5	1	625-126P	SPACER, JOYSTICK PANEL
6	1	720-038P	PLT, BOOT RETAINER
7	1	720-161A	JOYSTICK ASSEMBLY (AMBIDEXTROUS)
8	2	F-1011-01	NUT,HEX, 1/4-20 UNC-2B YELLOW PLATED
9	1	F-1020-01	CAPSCREW, 1/4-20 X 3-1/2", YZ, GR5
10	2	F-1448	LOCKNUT, 10-32 NYLOC YELLOW PLTD
11	1	F-1462	JAM NUT, 1/2-20, RH, YZ
12	1	F-1521	WASHER, 1/2" CUSTOM, YZ
13	2	F-1671	CARRIAGE BOLT, 5/16-18 X 3/4 GR5, YZ
14	3	F-2063	NUT, 5/16-18, NYLOC, FLANGED, YZ
15	2	F-2100	HHMS, 10-32 X 7/8", CZ
16	1	F-2103	SHCS, BUTTON HD, 1/4-20 X 1", CZ
17	1	F-2120	FHCS, 5/16-18 X 3/4", YZ, GR5
18	2	F-2132	NUT, 1/4-20 NYLOC, FLANGED, YZ
19	1	H-1989	BALL JOINT BUSHING
20	1	H-1991	JOY STICK BOOT
21	1	H-2964	HANDLE, JOYSTICK
22	1	H-3226	LINKAGE ASSEMBLY, JS & TS, RH
23	1	H-3229	LINKAGE, INNER, 1/4 X 6.375

JOYSTICK ASSEMBLY
{720-161A}

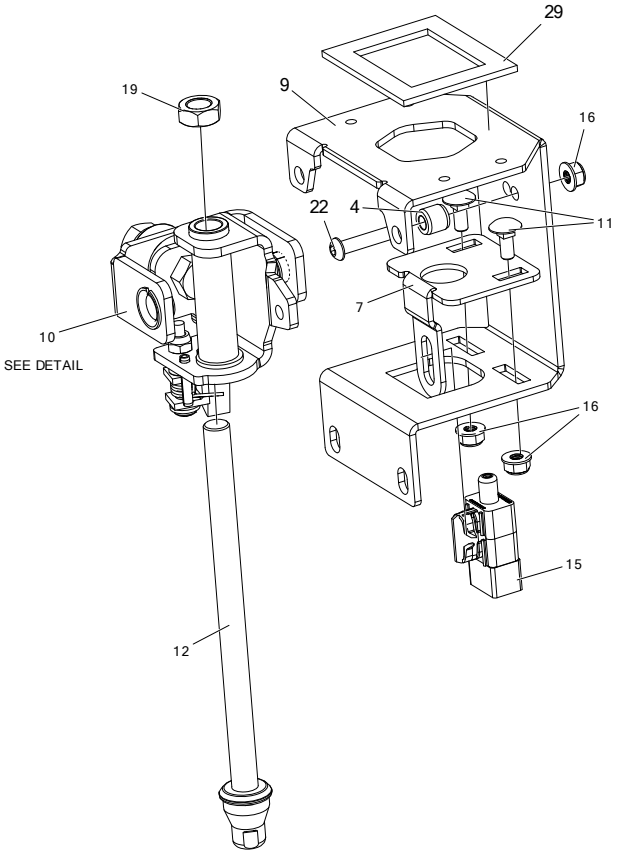

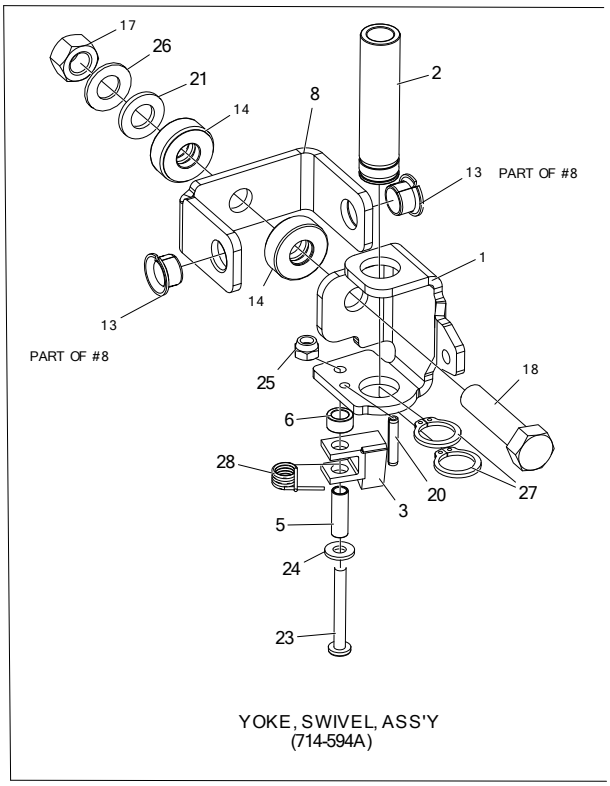

ITEM #	QTY	PART #	DESCRIPTION
1	1	625-096P	YOKE, SWIVEL, JOYSTICK
2	1	625-099P	TUBE, GUIDE, CONTROL ROD
3	1	714-593P	TAB, CAM DETENT
4	1	625-106P	PIN, PIVOT, JS
5	1	625-124P	TUBE-SPACER, DETENT CAM
6	1	625-125P	SPACER, CAM DETENT
7	1	724-114P	JOYSTICK NEUTRAL PLATE
8	1	625-128A	JOYSTICK ASSEMBLY
9	1	724-113P	JOYSTICK HOUSING
10	1	714-594A	YOKE, SWIVEL ASSEMBLY
11	2	F-2155	BOLT, CARRIAGE, 1/4-20 X 5/8”, YZ, GR5
12	1	709-169A	ROD ASSEMBLY, SHORT, 1/2"
13	2	D-3784	BUSHING, DU 1/2 DIA X 3/8 WIDE
14	2	D-3931	THRUST BEARING
15	1	E-6692	PLUNGER SWITCH, RAIL MOUNT
16	3	F-2132	NUT, FLANGED, 1/4-20 w/NYLOC, YZ
17	1	F-1005-05	NUT, 1/2-13, CENTERLOCK, YZ, GR5
18	1	F-1293	HHCS, 1/2-13 X 2", YZ, GR5
19	1	F-1462	JAM NUT, 1/2-20, RH, YZ
20	1	F-1503	PIN,SPIROL 3/16 DIA X 1 X .010 THK
21	1	F-1521	WASHER, 1/2" CUSTOM, YZ
22	1	F-2103	SHCS, BUTTON HD, 1/4-20 X 1", CZ
23	1	F-2135	SCREW, PANHEAD, PHILLIPS #12-24 X 1.75 CZ
24	1	F-2136	WASHER, FLAT, #12 PLAIN, CZ
25	1	F-2137	NUT, #12-24, NYLOCK
26	1	H-2704	SPRING, BELLEVILLE, .50 X 1 X .073
27	2	H-2705	RING, RETAINING, .75 EXT.
28	1	H-2710	SPRING, DETENT, JOYSTICK
29	1	H-1947	JOYSTICK GASKET

JOYSTICK ASSEMBLY MOUNTING & RELATED PARTS

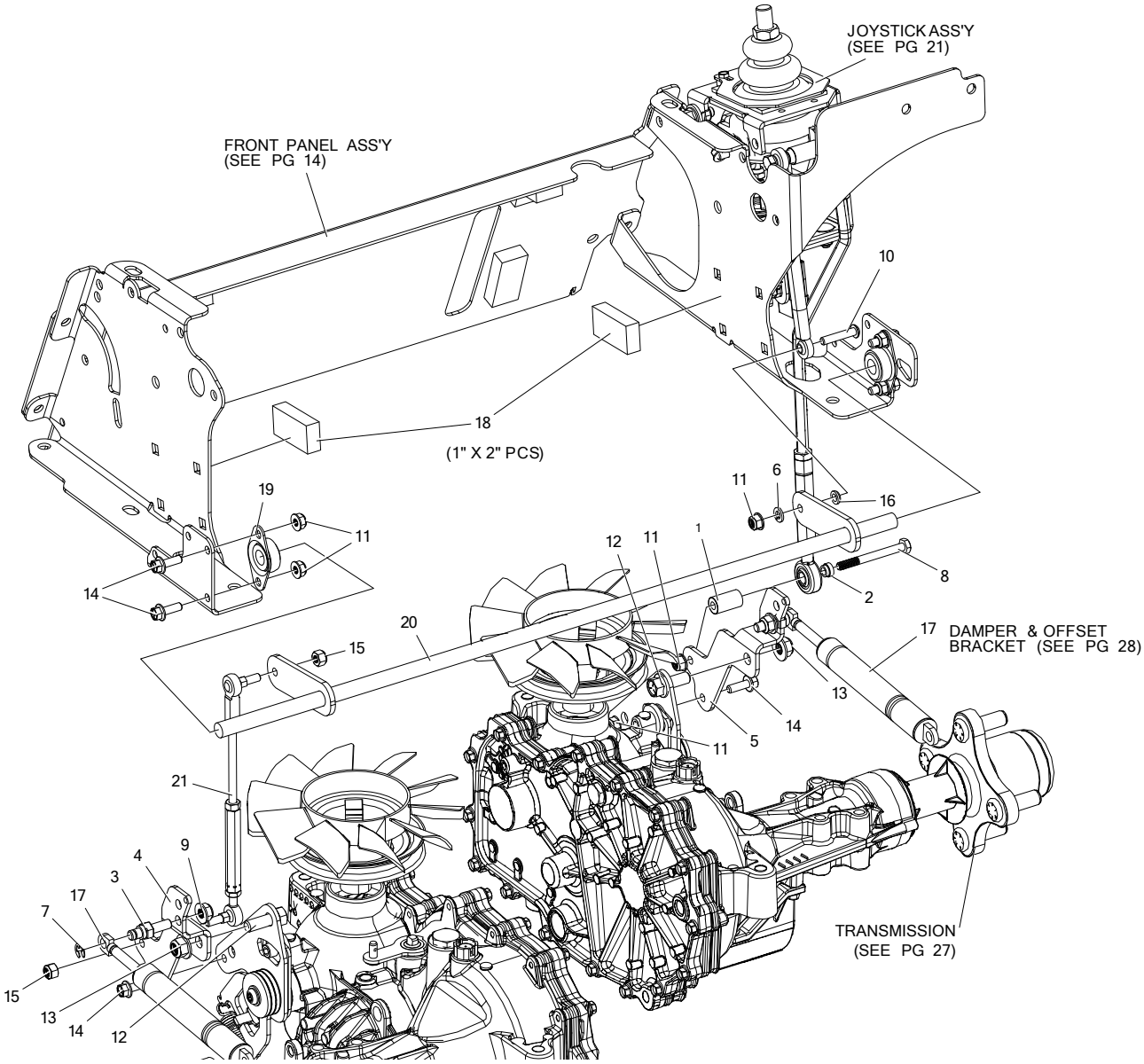

ITEM #	QTY	PART #	DESCRIPTION
1	1	625-100P	TUBE, PIVOT, JOYSTICK
2	3	625-116P	BUSHING, .375 ROD END, SHORT
3	2	638-028P	DAMPER BOLT 5/16-18 X 3/4"
4	1	721-163P	BRACKET, DAMPER OFFSET, LH (RTN)
5	1	721-164P	BRACKET, DAMPER OFFSET, RH (RTN)
6	1	F-1019-01	WASHER, LOCK, 1/4, YZ
7	2	F-1610	RETAINING RING, EXTERNAL
8	1	F-1703	CAPSCREW, HEX HD, 1/4-20 X 2-1/2"
9	2	F-2063	NUT, 5/16-18, NYLOC, FLANGED, YZ
10	1	F-2103	SHCS, BUTTON HD, 1/4-20 X 1"
11	8	F-2132	NUT, 1/4-20 NYLOC, FLANGED, YZ
12	2	F-2141	FHCS, 3/8-16 X 1", YZ, GR5
13	2	F-2151	NUT, 3/8-16 NYLOC, FLANGED, YZ
14	6	F-2162	FHCS, 1/4-20 X 3/4", YZ, GR5
15	2	F-2202	NUT, 1/4-20, NYLOC, YZ
16	1	H-1989	BALL JOINT BUSHING
17	2	H-2896	DAMPER
18	2	H-2990	NEOPRENE FOAM (ADHESIVE) 1/2"
19	2	H-3031	SIDE FLANGE BRG., 0.500, BRONZE
20	1	H-3221	WLDT, CROSS SHAFT, JS
21	1	H-3234	CONTROL LINKAGE ASSEMBLY

TWIN LEVER CONTROL & RELATED PARTS

RIGHT HAND SHOWN
LEFT HAND OPPOSITE

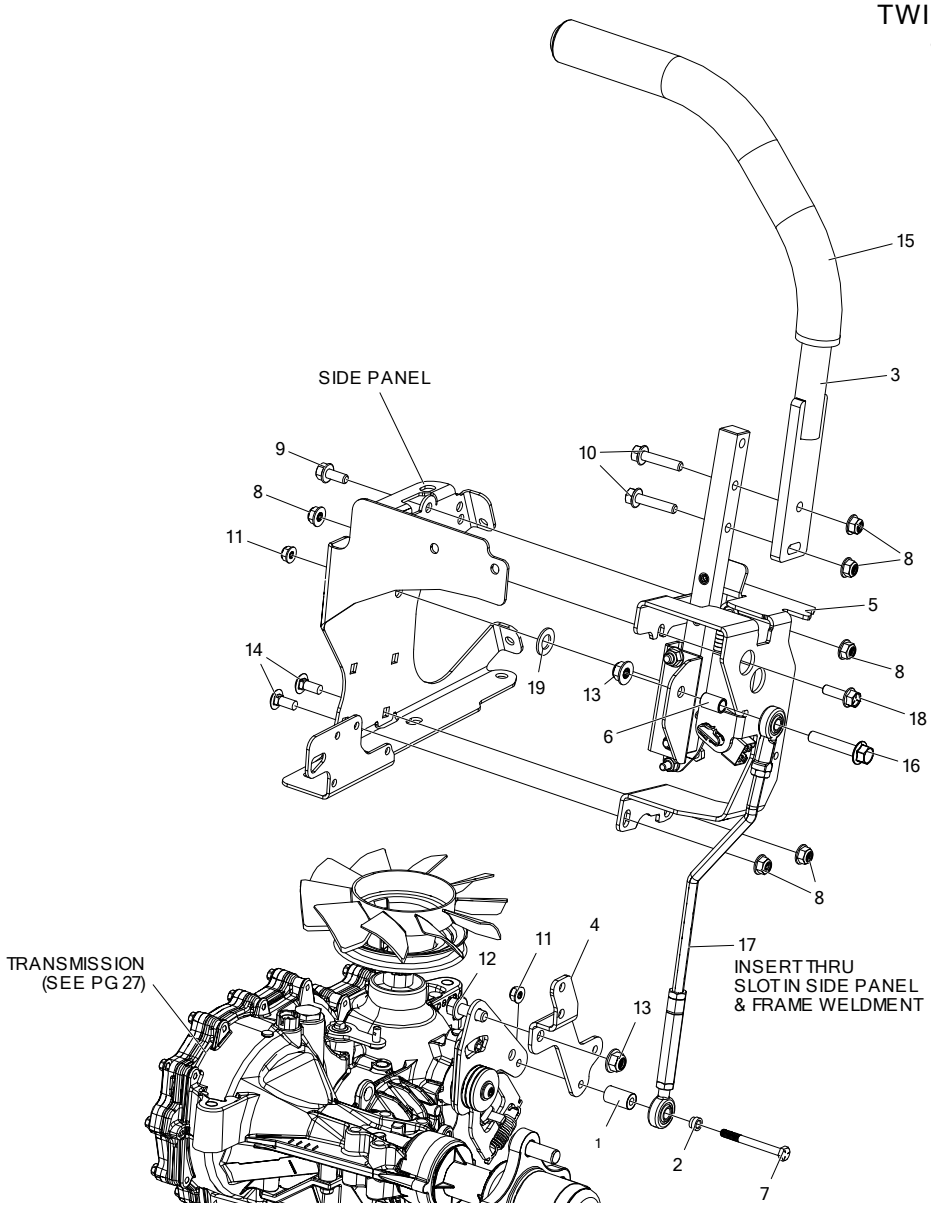

ITEM #	QTY	PART #	DESCRIPTION
1	1	625-100P	TUBE, PIVOT, JOYSTICK
2	1	625-116P	BUSHING, .375 ROD END, SHORT
3	1	659-375W	WLDT, DUAL LEVER
4	1	721-122P	BRACKET, DAMPER OFFSET, RH
-	1	721-121P	BRACKET, DAMPER OFFSET, LH
5	1	714-546A	ASSY, TS CONTROL, RH
-	1	714-547A	ASSY, TS CONTROL, LH
6	1	707-073P	STAND-OFF, LINKAGE MOUNT
7	1	F-1703	CAPSCREW, 1/4-20 X 2-1/2, GR5, ZC
8	6	F-2063	NUT, 5/16-18, NYLOC, FLANGED, YZ
9	1	F-2120	FHCS, 5/16-18 X 3/4", YZ, GR5
10	2	F-2129	FHCS, 5/16-18 X 1-1/2", YZ, GR5
11	1	F-2132	NUT, 1/4-20 NYLOC, FLANGED, YZ
12	1	F-2141	FHCS, 3/8-16 X 1", YZ, GR5
13	2	F-2151	NUT, 3/8-16 NYLOC, FLANGED, YZ
14	2	F-1671	CARRIAGE BOLT, 5/16-18 X 3/4", YZ, GR5
15	1	H-2739	GRIP, 15", CLOSED END
16	1	F-2126	FHCS, 3/8-16 X 2", YZ, GR5
17	1	H-3226	LINKAGE ASSEMBLY, JS & TS, RH
-	1	H-3227	LINKAGE ASSEMBLY, JS & TS, LH
18	1	F-2148	FHCS, 5/16-18 X 1", YZ, GR5
19	1	F-1521	WASHER, 1/2", TYPE B, NARR0W, YZ

TWIN LEVER ASSEMBLY
{714-546A - RIGHT SIDE}
{714-547A - LEFT SIDE}

RIGHT HAND SHOWN
LEFT HAND OPPOSITE

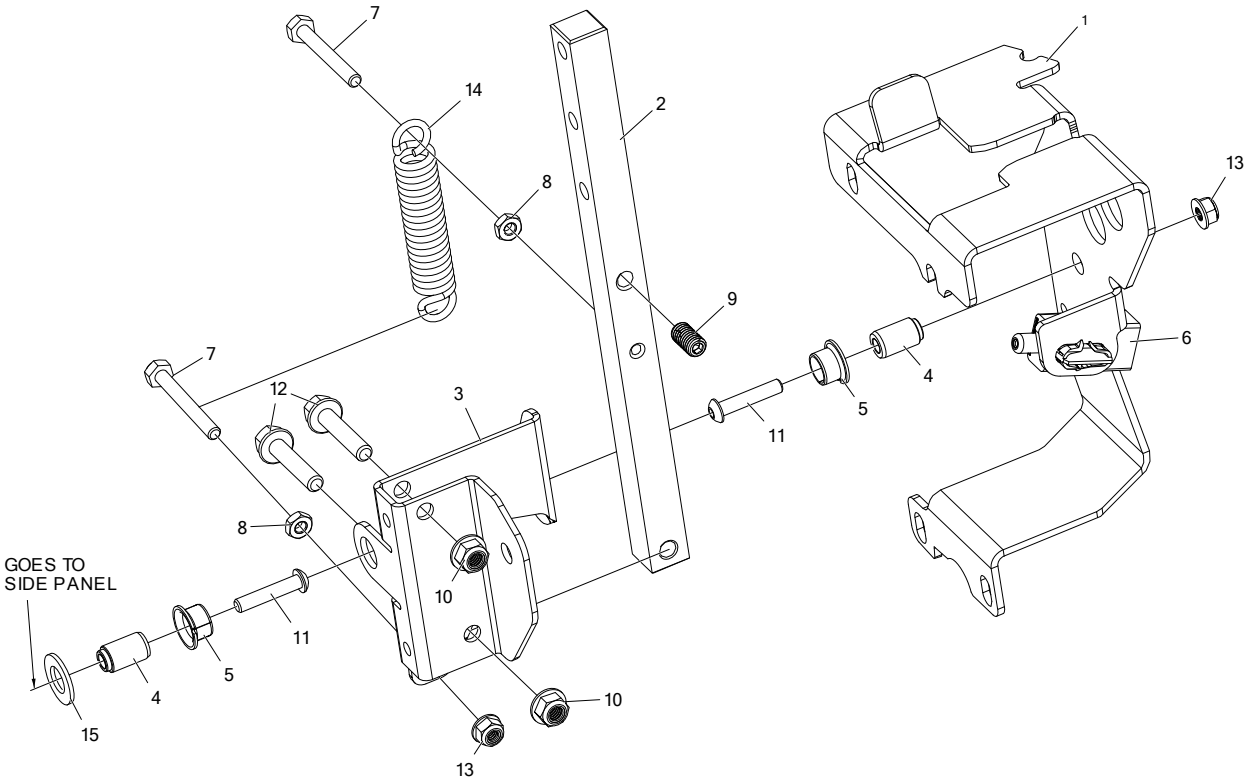

ITEM #	QTY	PART #	DESCRIPTION
1	1	714-539P	HOUSING, TWINSTICK, RH
-	1	714-540P	HOUSING, TWINSTICK, LH
2	1	714-541P	HANDLE BASE LEVER, TS
3	1	714-542P	PIVOT CHANNEL, RH
-	1	714-543P	PIVOT CHANNEL, LH
4	2	714-544P	PIVOT PIN
5	2	D-3784	BUSHING, DU 1/2 DIA X 3/8 WIDE
6	1	E-6692	PLUNGER SWITCH, RAIL MOUNT
7	2	F-1015-09	HHCS, 1/4-20 X 2", YZ, GR5
8	2	F-1011-01	NUT, HEX, 1/4-20, YZ
9	1	F-1903	SETSCREW, 3/8-16 X 3/4" W/ NYLON
10	2	F-2063	NUT, 5/16-18, NYLOC, FLANGED, YZ
11	2	F-2103	SHCS, BUTTON HD, 1/4-20 X 1", CZ
12	2	F-2129	FHCS, 5/16-18 X 1-1/2", YZ, GR5
13	2	F-2132	NUT, 1/4-20 NYLOC, FLANGED
14	1	H-3271	OVER-CENTER SPRING, TWINSTICK
15	1	F-1521	WASHER, 1/2", TYPE B, NARR0W, YZ

CONTROL PANEL ASSEMBLY

714-533A (KAW)

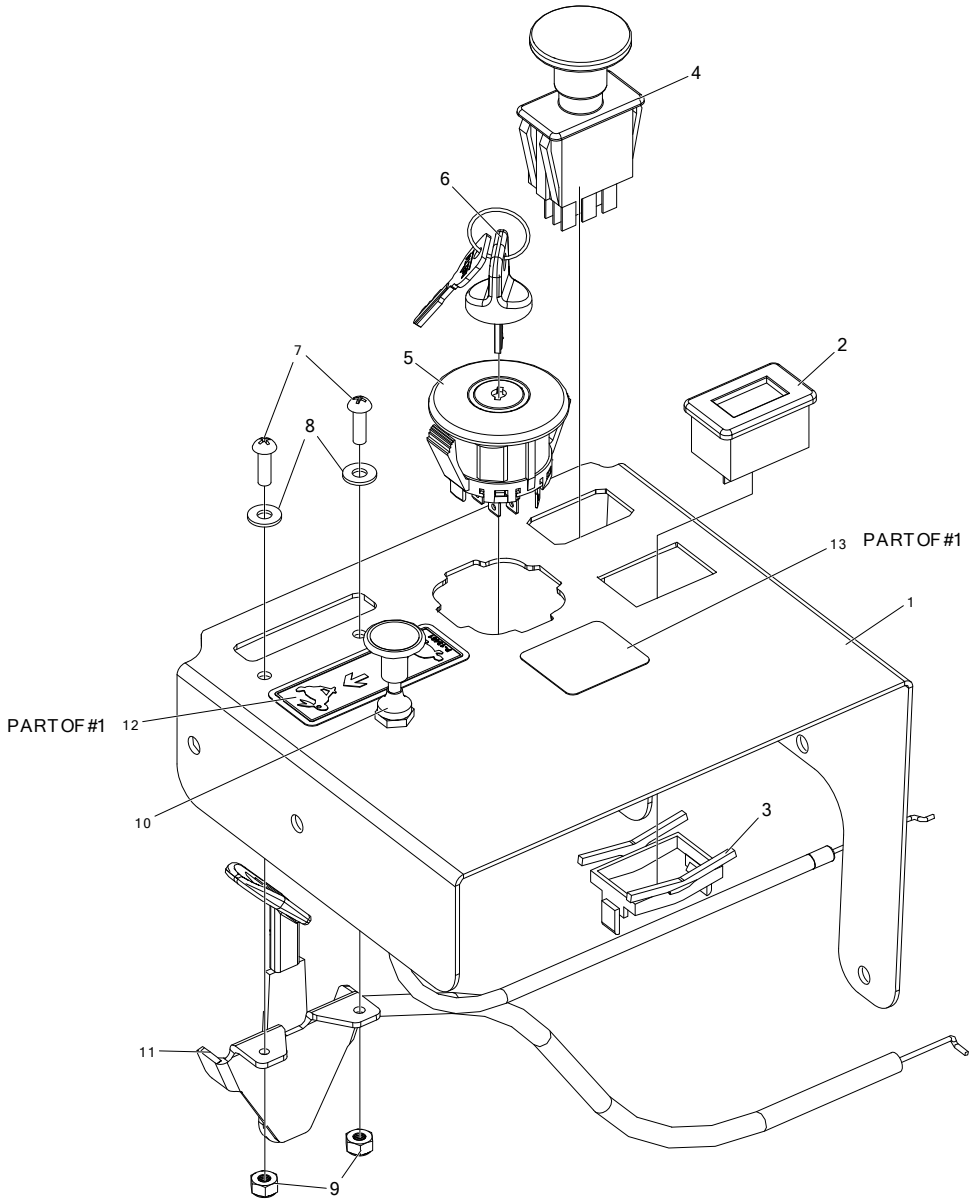

ITEM #	QTY	PART #	DESCRIPTION
1	1	714-599A	CONTROL PANEL W/ DECALS
2	1	E-5878	HOUR METER
3	1	E-6369	RETAINER CLIP
4	1	E-6403	PTO SWITCH
5	1	E-6717	IGNITION SWITCH, 4 POSITION
6	1	E-6718	KEY ASSEMBLY
7	2	F-1022-26	MACHINE SCREW, RND, 10-32 X 5/8, SLOTTED, CZ
8	2	F-1071	WASHER, FLAT #10, ZINC PLATED #10 SAE FLAT WASHER
9	2	F-1448	LOCKNUT, 10-32 NYLOC YELLOW PLTD
10	1	H-2287	CHOKE CABLE, 43-1/2"
11	1	H-2610	THROTTLE CABLE, 38", KAWASAKI
12	1	P-13481	DECAL, THROTTLE CONTROL
13	1	P-13750	DECAL, TAKE KEY

FENDER ASSEMBLY & RELATED PARTS

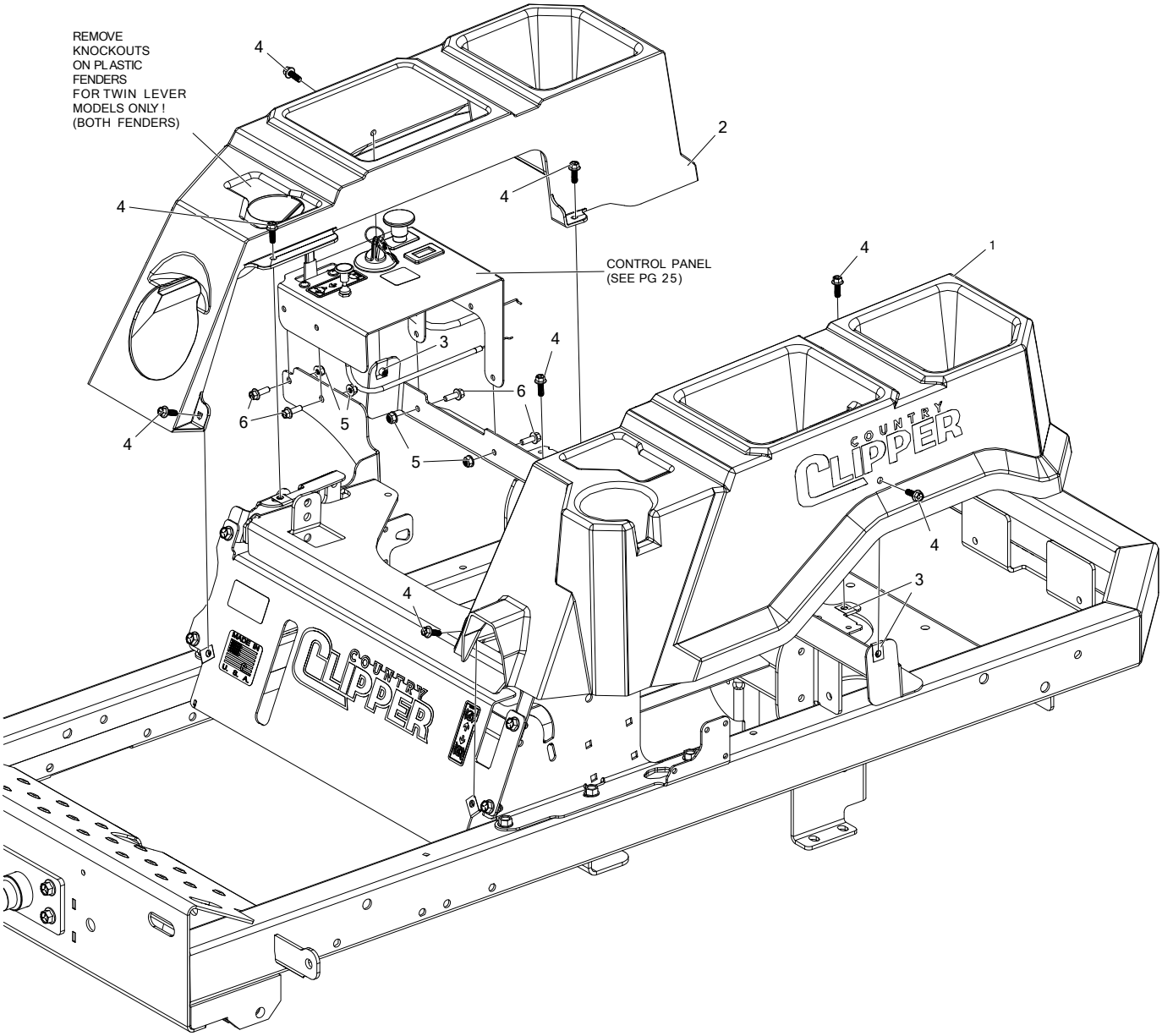

ITEM #	QTY	PART #	DESCRIPTION
1	1	H-3251	FENDER, LH
2	1	H-3252	FENDER, RH
3	4	F-1858	U-NUT, 1/4-20 THRD
4	8	F-2119	FHCS, 1/4-20 X 3/4", YZ, GR5, LOCK PATCH
5	4	F-2132	NUT, 1/4-20 NYLOC, FLANGED, YZ
6	4	F-2162	FHCS, 1/4-20 X 3/4", YZ, GR5

TRANSMISSION ASSEMBLY & RELATED PARTS

(LOOKING AT BOTTOM)

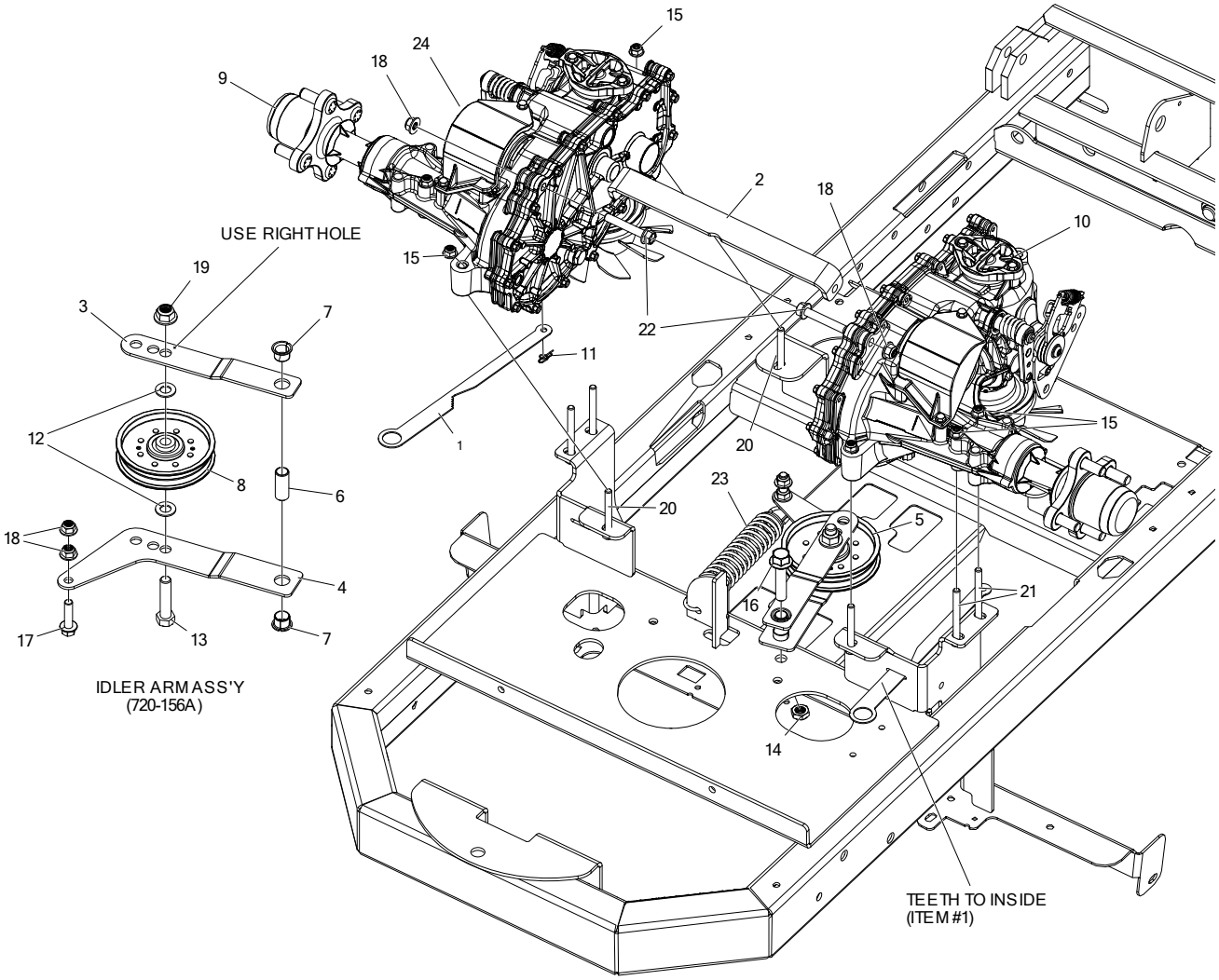

ITEM #	QTY	PART #	DESCRIPTION
1	2	714-454P	TAB, DUMP VALVE, COMMON
2	1	714-521P	HYDRO CROSS BRACE
3	1	714-592P	IDLER ARM, BOTTOM
4	1	720-145P	IDLER ARM, TOP
5	1	720-156A	IDLER ARM ASS'Y
6	1	722-031P	MOUNTING PIN
7	2	D-3730	BUSHING, DU 5/8 DIA X 1/2 LG
8	1	D-3924	PULLEY, FLAT IDLER, 4.25 OD, NTN, DBL INSERT
9	1	D-4207-01	TRANSAXLE, ZT-3100, TOP FAN, TANKLESS, RH
10	1	D-4207-02	TRANSAXLE, ZT-3100, TOP FAN, TANKLESS, LH
11	2	F-1492	RUE RING, 5/16
12	2	F-1521	WASHER, 1/2" CUSTOM, YZ

ITEM #	QTY	PART #	DESCRIPTION
13	1	F-1664	HHCS, 1/2-13 X 2-1/4", YZ, GR5
14	1	F-1966	NUT, THIN, 1/2-13, NYLOC, FLANGED, YZ
15	8	F-2063	NUT, 5/16-18, NYLOC, FLANGED, YZ
16	1	F-2144	FHCS, 1/2-13 X 2-1/4", YZ, GR5
17	1	F-2147	FHCS, 3/8-16 X 1-1/2", YZ, GR5
18	4	F-2151	NUT, 3/8-16 NYLOC, FLANGED, YZ
19	1	F-2152	NUT, 1/2-13 NYLOC, FLANGED, YZ
20	4	F-2177	FHCS, 5/16-18 X 2-1/2, YZ, GR5
21	4	F-2178	FHCS, 5/16-18 X 3", YZ, GR5
22	2	F-2218	FHCS, 3/8-16 X 2-1/4", YZ, GR5
23	1	H-2907	SPRING,5.43 X 1-1/2", TAPERED ENDS
24	2	H-2567	TRANSAXLE OIL FILTER

DAMPER, OFFSET BRACKET, & RETURN TO NEUTRAL HARDWARE

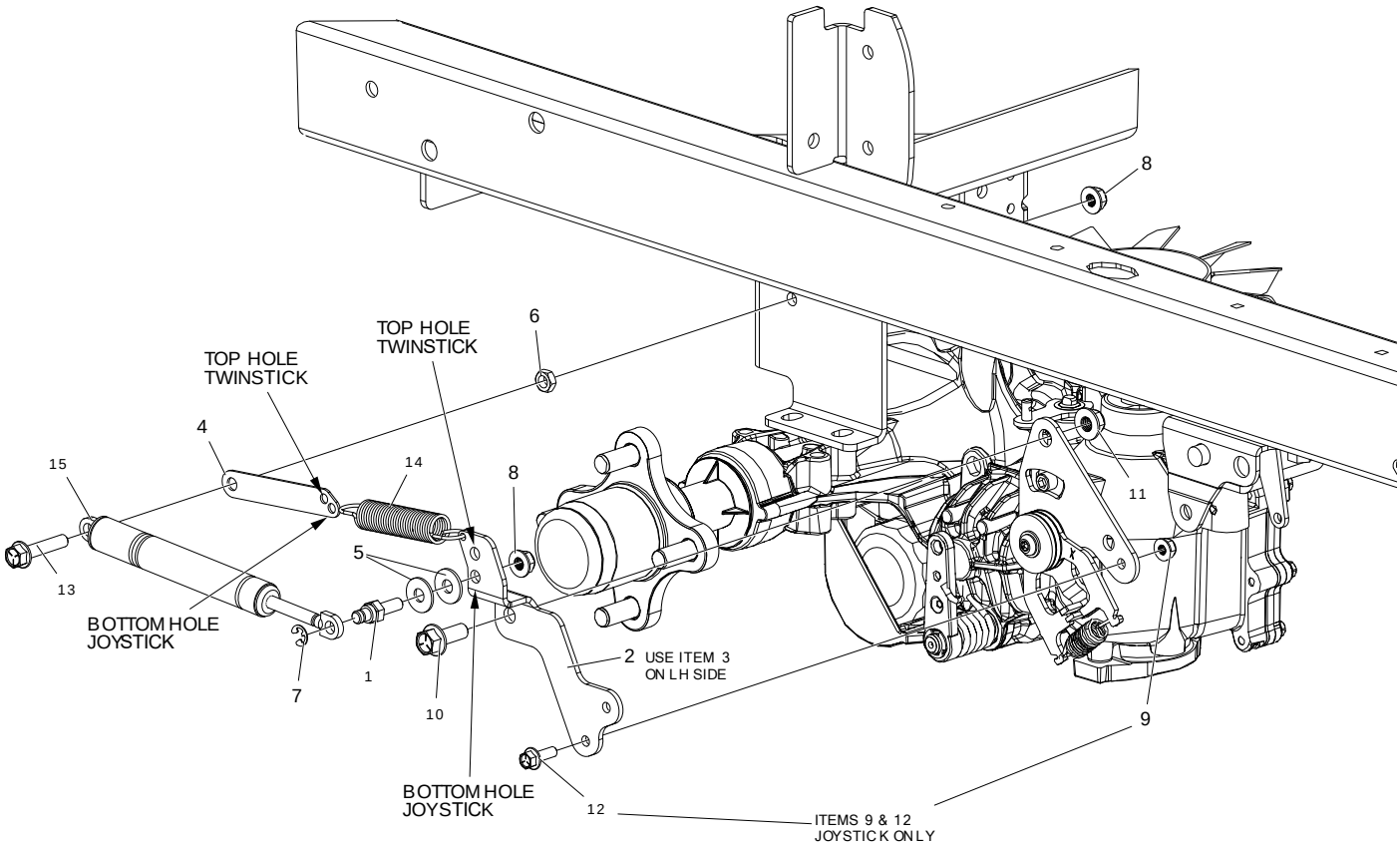

ITEM #	QTY	PART #	DESCRIPTION
1	2	638-028P	DAMPER BOLT 5/16-18 X 3/4"
2	1	721-164P	BRACKET, DAMPER OFFSET, RH (RTN)
3	1	721-163P	BRACKET, DAMPER OFFSET, LH (RTN)
4	2	721-165P	PLATE, NEUTRAL SPRING EXTENSION
5	4	F-1009-02	WASHER, FLAT, 5/16
6	2	F-1011-02	NUT, HEX 5/16-18
7	2	F-1610	RETAINING RING, EXTERNAL
8	4	F-2063	NUT, 5/16-18, NYLOC, FLANGED, YZ
9	2	F-2132	NUT, 1/4-20 NYLOC, FLANGED, YZ
10	2	F-2141	FHCS, 3/8-16 X 1", YZ, GR5
11	2	F-2151	NUT, 3/8-16 NYLOC, FLANGED, YZ
12	2	F-2162	FHCS, 1/4-20 X 3/4", YZ, GR5
13	2	F-2248	FHCS, 5/16-18 X 2-1/4", YZ, GR8
14	2	H-1635	SPRING, EXT, 3/4" OD X 4" OAL
15	2	H-2896	DAMPER

SEAT BASE & RELATED PARTS

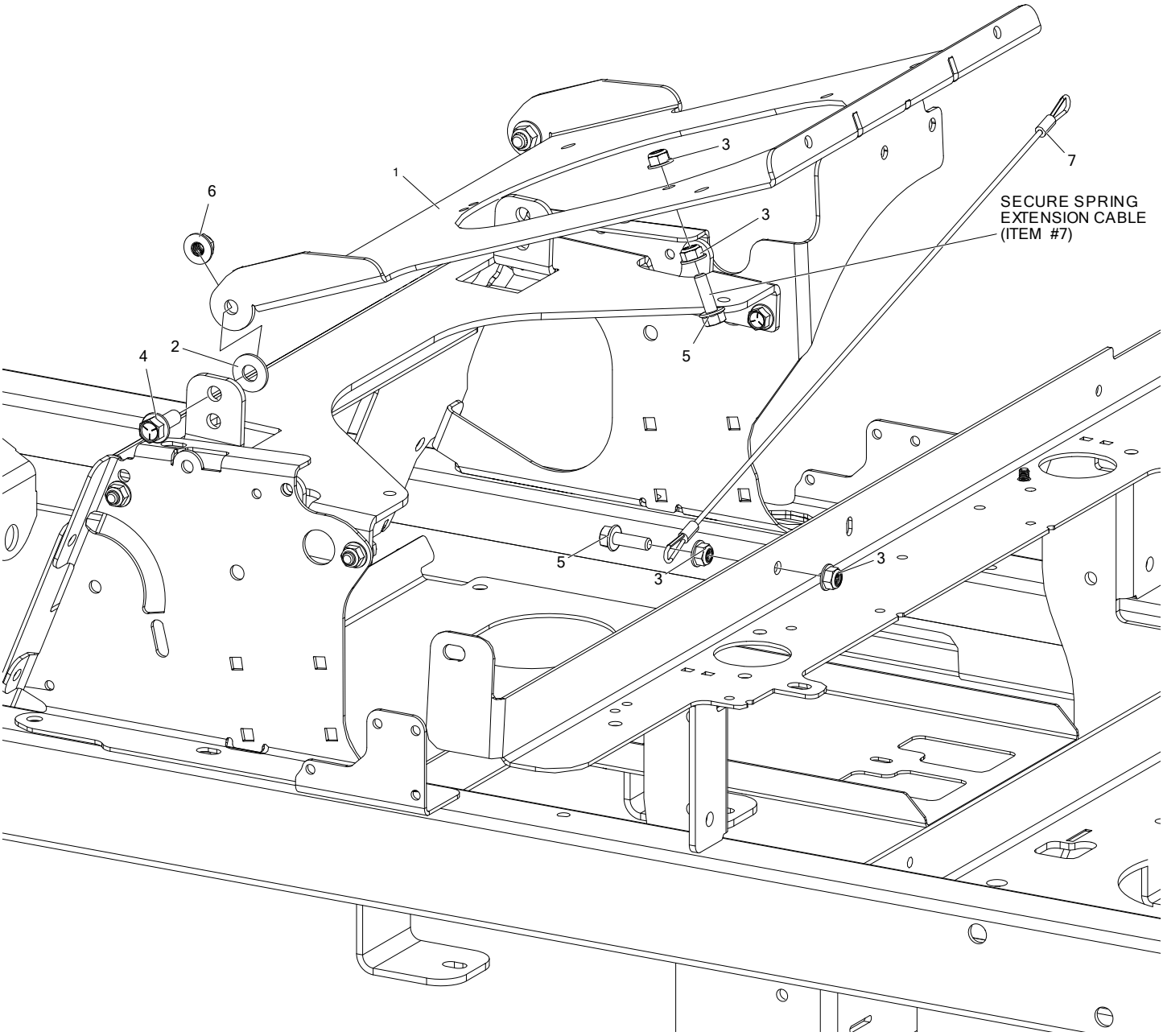

ITEM #	QTY	PART #	DESCRIPTION
1	1	721-013P	PLT, SEAT MOUNT, LOW
2	2	F-1009-03	WASHER, FLAT, 3/8, YZ
3	4	F-2063	NUT, 5/16-18, NYLOC, FLANGED, YZ
4	2	F-2141	FHCS, 3/8-16 X 1", YZ, GR5
5	2	F-2148	FHCS, 5/16-18 X 1", YZ, GR5
6	2	F-2151	NUT, 3/8-16 NYLOC, FLANGED, YZ
7	1	H-2460	SPRING EXTENSION CABLE

SEAT, ARM RESTS, & RELATED PARTS

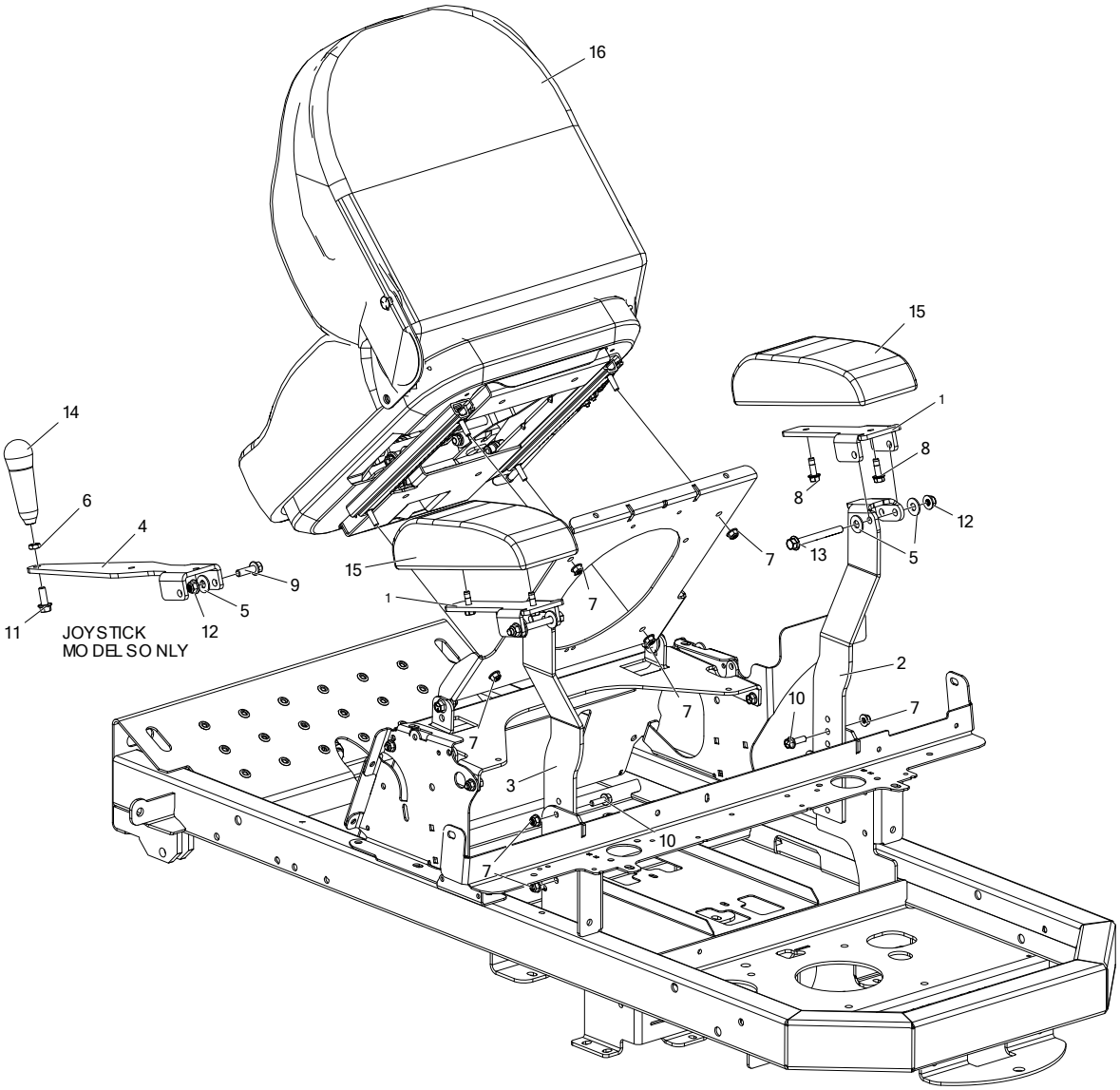

ITEM #	QTY	PART #	DESCRIPTION
1	2	720-138P	BRACKET, PIVOTING ARM REST (TWINSTICK)
-	1	720-138P	BRACKET, PIVOTING ARM REST (JOYSTICK)
2	1	720-169P	ARM REST, BASE MOUNT, LH, HINGED (ADJ)
3	1	720-170P	ARM REST, BASE MOUNT, LH, HINGED (ADJ)
4	1	721-141P	ARM REST BRACKET, JS, (FIXED)
5	5	F-1009-03	WASHER, FLAT, 3/8"
6	1	F-1486	NUT, JAM, 3/8-16, YZ
7	8	F-2063	NUT, 5/16-18, NYLOC, FLANGED, YZ
8	4	F-2121	FHCS, 5/16-18 X 1", LOCK PATCH, YZ, GR5
9	1	F-2125	FHCS, 3/8-16 X 1-1/4, YZ, GR5
10	4	F-2148	FHCS, 5/16-18 X 1", YZ, GR5
11	1	F-2141	FHCS, 3/8-16 X 1", YZ, GR5
12	3	F-2151	NUT, 3/8-16 NYLOC, FLANGED
13	2	F-2303	FHCS, 3/8-16 X 3-1/2", YZ, GR5
14	1	H-2764	HANDLE, JOYSTICK
15	2	H-2799	PAD, ARM REST
16	1	H-3129	SEAT ASS'Y, XLT
-	1	H-3213	SEAT BACK COVER FOR H-3129

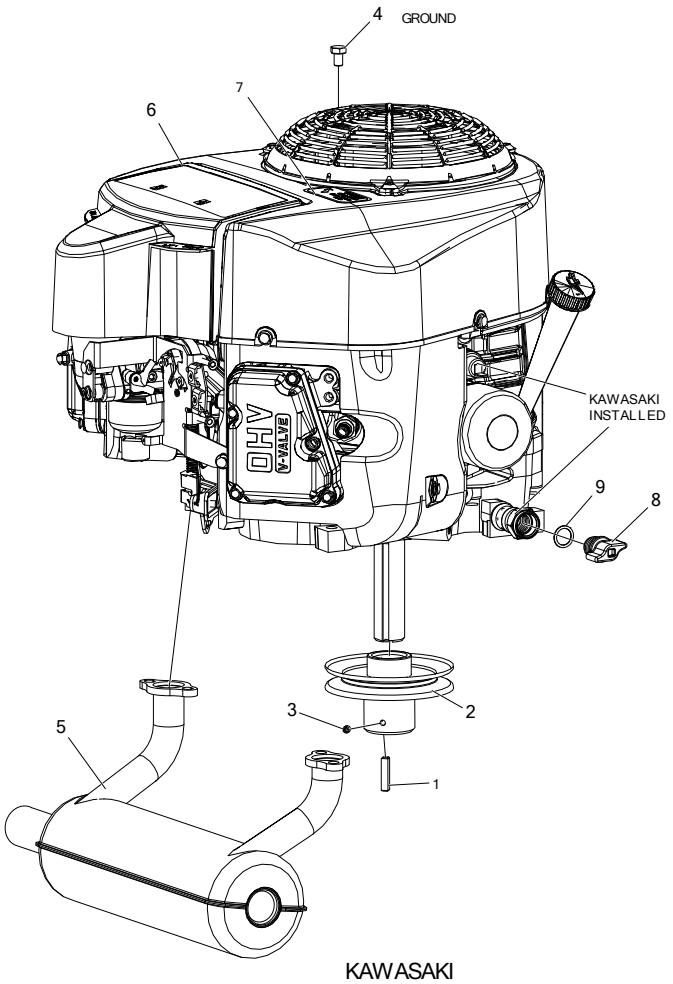

KAWASAKI
24 HP FR730

(USE THROTTLE CABLE H-2610 & CHOKE CABLE H-2287)

ITEM #	QTY	PART #	DESCRIPTION
1	1	621-113P	SQUARE KEY 1/4 X 1/4 X 1-1/4
2	1	D-3974	MOTOR, PULLEY, 4.51 W/ 1-1/8" SHAFT
3	1	F-1228	SET SCREW, SOCKET, 1/4-20 X 1/4", W/NYLOC
4	1	F-2243	HHCS, M8-1.25 X 12, YZ, GR8
5	1	H-3020	MUFFLER. KAWASAKI FR730
6	1	M-5419	ENGINE, KAW, 24HP FR730, 3400RPM
7	1	P-10077-11	DECAL, "PERIODICALLY CLEAN"
8	1	H-3253	OIL PLUG, THUMB SCREW
9	1	H-3254	O-RING, OIL PLUG, THUMB SCREW

ENGINE & CLUTCH MOUNTING & RELATED PARTS

(LOOKING AT BOTTOM)

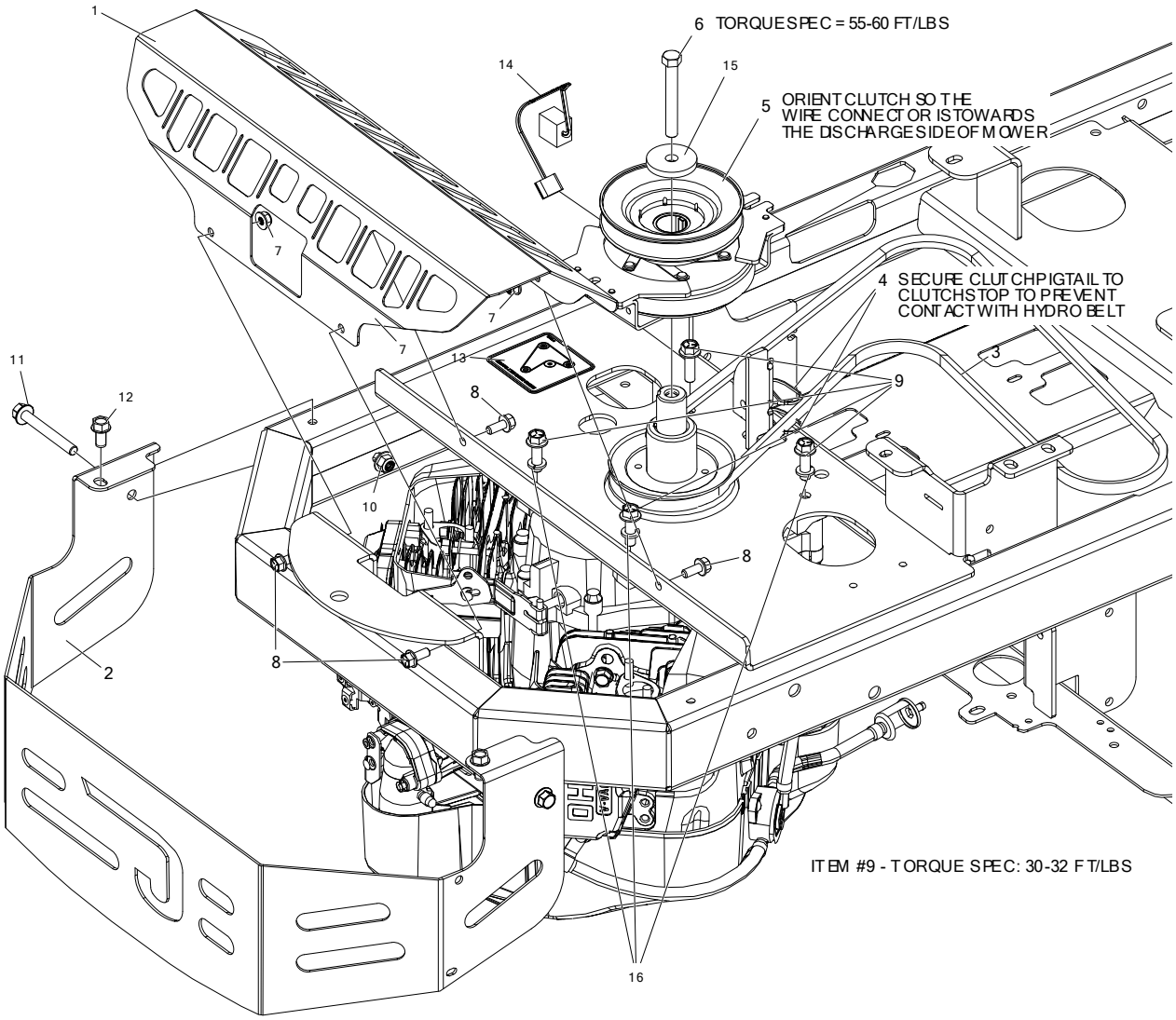

ITEM #	QTY	PART #	DESCRIPTION
1	1	714-611P	GUARD, MUFFLER
2	1	721-117P	GUARD, ENGINE
3	1	D-3769	V BELT A-67 KEVLAR
4	2	E-5842	WIRE TIE
5	1	E-6780	CLUTCH, OGURA GT2.75, 150 FT/LBS, 1-1/8" BORE
6	1	F-2139	HHCS, 7/16-20 X 2", YZ, GR8
7	4	F-2063	NUT, 5/16-18, NYLOC, FLANGED, YZ
8	4	F-2120	FHCS, 5/16-18 X 3/4", YZ, GR5
9	4	F-2125	FHCS, 3/8-16 X 1-1/4", YZ, GR5
10	2	F-2151	NUT, 3/8-16 NYLOC, FLANGED, YZ
11	2	F-2180	FHCS, 3/8-16 x 3", YZ, GR5
12	2	F-2219	HFCS, 3/8-16 X 3/4", CZ, THD FORMING
13	1	P-12918	DECAL, HYDRO BELT ROUTING
14	1	E-6575	HARNESS ADAPTER, CLUTCH PIGTAIL (13.75")
15	1	720-124P	WASHER, OGURA CLUTCH, 0.471 ID X 1.875 OD X 0.25 THK
16	3	F-1019-03	LOCK WASHER, HVY, 3/8, YZ

WIRE HARNESS & RELATED PARTS

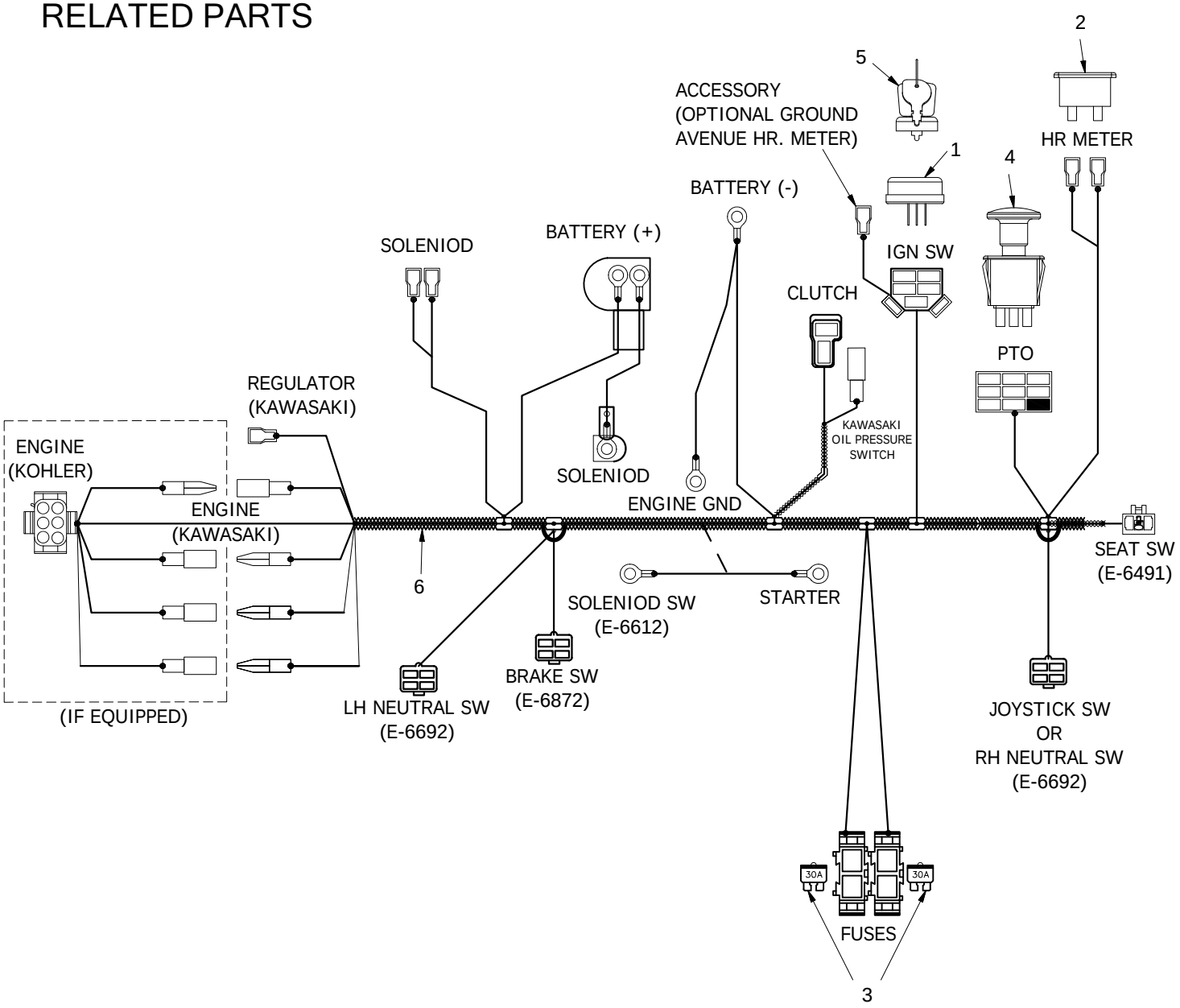

ITEM #	PART #	DESCRIPTION
1	E-6717	IGNITION SWITCH, 4 POSITION
2	E-5878	HOUR METER
3	E-6207	FUSE, #ATC-30
4	E-6403	PTO SWITCH
5	E-6718	KEY ASSEMBLY
6	E-6870	WIRE HARNESS, COMMON (BRAKE TO START)

WIRING SCHEMATIC

(BRAKE TO START)

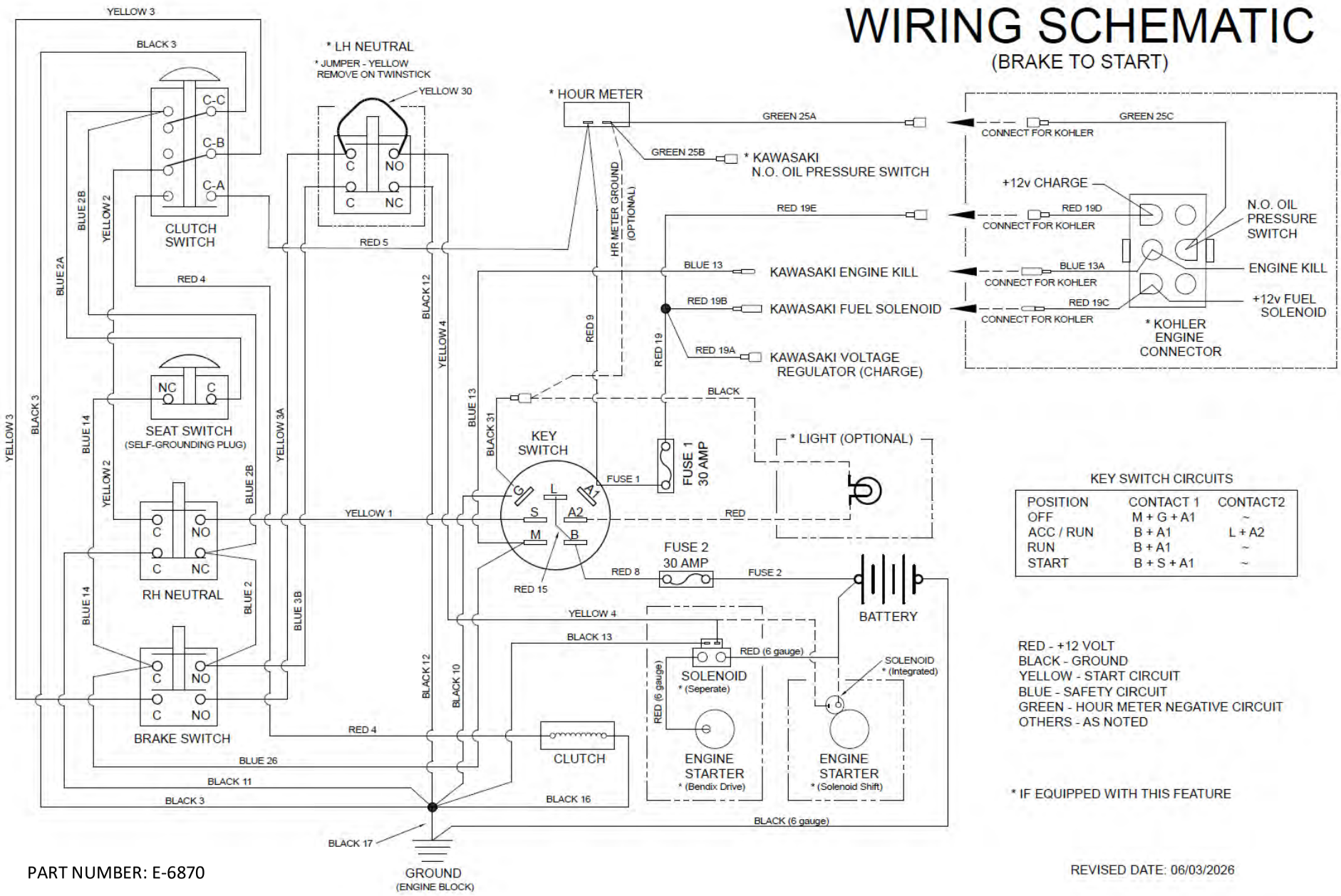

KEY SWITCH CIRCUITS

POSITION	CONTACT 1	CONTACT2
OFF	M + G + A1	~
ACC / RUN	B + A1	L + A2
RUN	B + A1	~
START	B + S + A1	~

RED - +12 VOLT
BLACK - GROUND
YELLOW - START CIRCUIT
BLUE - SAFETY CIRCUIT
GREEN - HOUR METER NEGATIVE CIRCUIT
OTHERS - AS NOTED

* IF EQUIPPED WITH THIS FEATURE

PART NUMBER: E-6870

REVISED DATE: 06/03/2026

COUNTRY CLIPPER LIMITED WARRANTY

Models: XLT

Effective: Units Retailed after October 1, 2020

Consumer Limited Warranty

Country Clipper, a Division of Shivvers Mfg. Inc., will Warrant on the terms and conditions herein, that we will repair, adjust, or replace parts found by examination by the factory or by an authorized Country Clipper dealer to be defective in material, workmanship, or both, and operated and maintained as shown by Country Clipper's instructions and manuals for a period of 3 years or 400 hours (whichever occurs first) of Residential use* from the date of original purchase. The first three years or 400 hours will include parts and labor.

*Residential use is defined as use of the equipment on property the same as your primary residence or farmstead. If the equipment is used on more than one property or business use (agriculture, commercial, industrial, and/or governmental), this is considered Commercial use, and the Commercial Warranty will apply. If usage exceeds industry norms for Residential mowing, validation of usage maybe required to retain the Consumer Limited Warranty.

Commercial Limited Warranty

When used for Commercial, business, production agriculture, horticultural or non-profit institutional use, the Limited Warranty term is 1 year or 400 hours (whichever occurs first), parts and labor, from date of purchase. This Warranty applies to the original purchaser only and is non-transferable. Mowers used for Rental purposes are not Warranted.

The Warranty applies to Country Clipper XLT models and subsequent revisions to these models sold until said warranty is revised. This Warranty applies to the original purchaser only and is non-transferable.

Warranty Exceptions

- Normal service parts are Warranted for 90 days from the original purchase date for defects in materials or workmanship (Belts, Tires, Deck Rollers, Mower Blades, Deck Chute, and Plastic/Cloth Seat Components).
- Batteries have a 6 month Warranty by the battery manufacturer.
- Country Clipper approved accessories and attachments for the product (s) identified herein are Warranted for one 1 year from their original date of purchase.
- The engine Warranty is covered by the engine manufacture and is not Warranted by Country Clipper. The engine manufacturer's Warranty statement is included in the literature packet.

- The hydraulic transmission Warranty is covered by the transmission manufacture and is not Warranted by Country Clipper. The transmission manufacturer's Warranty statement is included in the literature packet.

Items and Conditions Not Covered by this Warranty

Items and conditions not covered include:

- Pickup and delivery charges to and from authorized Country Clipper dealer.
- Parts that are not genuine Country Clipper services parts are not covered by this Warranty and may void the Warranty.
- Repair or replacement caused by accident, misuse, neglectful or improper maintenance, improper repairs performed or parts installed, use of After Market parts, unauthorized alteration or modification, and/or normal wear and deterioration for turf equipment.
- Routine maintenance services, adjustments, cleaning and / or expendables (i.e. mower blades, lubricants, fuel, fuel filters, spark plugs, oil, oil filters, and air filters)
- Damaged incurred due to a natural disaster or exposure to the elements.
- Repairs required due to use of incompatible parts, accessories, or supplies used on the equipment other than recommended in the operator's manual or other instructional guides provided by Country Clipper.

Replacement Parts

Replacement parts for Residential use mowers that have exceeded the Warranty period are Warranted for 90 days from the date of replacement against defects in material and workmanship. A proof of purchase, of the replacement part, is required at the time the claim is submitted. Labor on replacement parts is not Warranted. Replacement parts on mowers used Commercially or for Rental operation are not Warranted.

There are no other express Warranties for this product in effect during this time period.

An authorized Country Clipper dealer must perform all Warranty work using Country Clipper approved parts.

Obtaining Warranty Service

A completed product registration must be submitted at the time of purchase. If the dealer does not register the product, the customer is responsible to complete the product registration card in the literature package and return it to Country Clipper. The servicing dealer will require a proof of purchase if the product has not been registered.

Customer Responsibility

- The owner is responsible for delivery of the mower to the Country Clipper approved servicing dealer, within the Warranty period, and its return after Warranty work is completed.
- The owner is responsible for maintaining and adjusting the equipment as outlined in the owner's manual.
- Prompt notification to an Authorized Country Clipper Dealer or Country Clipper representative of the need for warranty repair.
- Having the warranty work performed by an authorized Country Clipper Dealer.
- Contacting the desired Country Clipper servicing dealer to arrange the service through their shop.

Contact the desired Country Clipper servicing dealer to arrange the service through their shop. Use our dealer locator at www.countryclipper.com or U.S. and Canada customers can call 800-344-8237 to locate their nearest dealer.

General Conditions

Country Clipper may change the design of its products from time to time. Nothing contained in this Warranty shall be construed as obligating Country Clipper to incorporate said design changes into previously manufactured products, nor shall said changes be construed as an admission that previous designs were defective.

All implied Warranties, including those of merchantability and fitness for a particular purpose are, unless specifically required by the law of the jurisdiction, hereby excluded. Where implied Warranties are required by law, including those of merchantability and fitness for a particular purpose, they are, where allowed by the law of the State, limited to the above stated term of this Warranty. Liability for consequential damages, under any and all Warranties, both express and implied are hereby excluded unless specifically required by the statutory law of the jurisdiction. No claim of breach of Warranty shall be cause for cancellation or rescission of the contract of sale of Country Clipper equipment.

This Warranty gives you specific legal rights, and you may also have other rights, which vary from region to region.

To obtain the nearest servicing dealer:

Dealer locator: www.countryclipper.com
Email: service@countryclipper.com
Phone: 800-344-8237 or 641-872-2544

Mail: Country Clipper a Division of
Shivvers Manufacturing Inc.
613 West English St.
Corydon, IA 50060

COUNTRY CLIPPER LIMITED WARRANTY - AUSTRALIA

Models: Avenue, Boulevard, XLT

Effective October 1st, 2021

Consumer Limited Warranty

Country Clipper, a Division of Shivvers Mfg. Inc., will Warrant on the terms and conditions herein, that we will repair, adjust, or replace parts found by examination by the factory or by an authorized Country Clipper dealer to be defective in material, workmanship, or both, and operated and maintained as shown by Country Clipper's instructions and manuals for a period of 2 years of Residential use* from the date of original purchase. The two year period will include parts and labor.

*Residential use is defined as use of the equipment on property the same as your primary residence or farmstead. If the equipment is used on more than one property or business use (agriculture, commercial, industrial, and/or governmental), this is considered Commercial use, and the Commercial Warranty will apply. If usage exceeds industry norms for Residential mowing, validation of usage maybe required to retain the Consumer Limited Warranty.

The Warranty applies to Country Clipper Avenue, Boulevard, and XLT models and subsequent revisions to these models sold until said warranty is revised. This Warranty applies to the original purchaser only and is non-transferable.

Warranty Exceptions

- Normal service parts are Warranted for 90 days from the original purchase date for defects in materials or workmanship (Belts, Tires, Deck Rollers, Mower Blades, Deck Chute, and Plastic/Cloth Seat Components).
- Batteries have a 6 month Warranty by the battery manufacturer.
- Country Clipper approved accessories and attachments for the product (s) identified herein are Warranted for one 1 year from their original date of purchase.
- The engine Warranty is covered by the engine manufacture and is not Warranted by Country Clipper. The engine manufacturer’s Warranty statement is included in the literature packet.
- The hydraulic transmission Warranty is covered by the transmission manufacture and is not Warranted by Country Clipper. The transmission manufacturer’s Warranty statement is included in the literature packet.

Commercial Limited Warranty

When used for Commercial, business, production agriculture, horticultural or non-profit institutional use, the Limited Warranty term is 60 days, parts and labor, from date of purchase. This Warranty applies to the original purchaser only and is non-transferable. Mowers used for Rental purposes are not Warranted.

Items and Conditions Not Covered by this Warranty

Items and conditions not covered include:

- Pickup and delivery charges to and from authorized Country Clipper dealer.
- Parts that are not genuine Country Clipper services parts are not covered by this Warranty and may void the Warranty.
- Repair or replacement caused by accident, misuse, neglectful or improper maintenance, improper repairs performed or parts installed, use of After Market parts, unauthorized alteration or modification, and/or normal wear and deterioration for turf equipment.
- Routine maintenance services, adjustments, cleaning and / or expendables (i.e. mower blades, lubricants, fuel, fuel filters, spark plugs, oil, oil filters, and air filters)
- Damaged incurred due to a natural disaster or exposure to the elements.
- Repairs required due to use of incompatible parts, accessories, or supplies used on the equipment other than recommended in the operator's manual or other instructional guides provided by Country Clipper.

Replacement Parts

Replacement parts for Residential use mowers that have exceeded the Warranty period are Warranted for 90 days from the date of replacement against defects in material and workmanship. A proof of purchase, of the replacement part, is required at the time the claim is submitted. Labor on replacement parts is not Warranted. Replacement parts on mowers used Commercially or for Rental operation are not Warranted.

There are no other express Warranties for this product in effect during this time period.

An authorized Country Clipper dealer must perform all Warranty work using Country Clipper approved parts.

Obtaining Warranty Service

A completed product registration must be submitted at the time of purchase. If the dealer does not register the product, the customer is responsible to complete the product registration card in the literature package and return it to Country Clipper. The servicing dealer will require a proof of purchase if the product has not been registered.

Customer Responsibility

- The owner is responsible for delivery of the mower to the Country Clipper approved servicing dealer, within the Warranty period, and its return after Warranty work is completed.
- The owner is responsible for maintaining and adjusting the equipment as outlined in the owner's manual.
- Prompt notification to an Authorized Country Clipper Dealer or Country Clipper representative of the need for warranty repair.
- Having the warranty work performed by an authorized Country Clipper Dealer.
- Contacting the desired Country Clipper servicing dealer to arrange the service through their shop.

General Conditions

Country Clipper may change the design of its products from time to time. Nothing contained in this Warranty shall be construed as obligating Country Clipper to incorporate said design changes into previously manufactured products, nor shall said changes be construed as an admission that previous designs were defective.

All implied Warranties, including those of merchantability and fitness for a particular purpose are, unless specifically required by the law of the jurisdiction, hereby excluded. Where implied Warranties are required by law, including those of merchantability and fitness for a particular purpose, they are, where allowed by the law of the State, limited to the above stated term of this Warranty. Liability for consequential damages, under any and all Warranties, both express and implied are hereby excluded unless specifically required by the statutory law of the jurisdiction. No claim of breach of Warranty shall be cause for cancellation or rescission of the contract of sale of Country Clipper equipment.

This Warranty gives you specific legal rights, and you may also have other rights, which vary from region to region.

Australian Consumer Law

Our goods come with guarantees that cannot be excluded under the Australian Consumer Law. You are entitled to a replacement or refund for a major failure and for compensation for any other reasonably foreseeable loss or damage. You are also entitled to have the goods repaired or replaced if the goods fail to be of acceptable quality and the failure does not amount to a major failure.

To obtain the nearest servicing dealer:

Dealer locator: www.countryclipper.com
Email: service@countryclipper.com
Phone: 800-344-8237 or 641-872-2544

Mail: Country Clipper a Division of
Shivvers Manufacturing Inc.
613 West English St.
Corydon, IA 50060

KAWASAKI LIMITED WARRANTY

FOUR-CYCLE ENGINE

Kawasaki Motors Corp., U.S.A., P.O. Box 888285, Grand Rapids, MI 49588-8285 (hereinafter "Kawasaki") warrants to the initial purchaser of each new Kawasaki four-cycle engine purchased in any of the following regions: North, Central or South America, Caribbean, Australia, New Zealand, and all territories of the United States of America (collectively, the "Purchase Area") that it will repair or replace, free of charge, any engine parts found to be defective, under normal use and proper maintenance, for a period of thirty-six (36) months, subject to the following conditions, exclusions, obligations and limitations. If you have questions about warranty coverage in your region, please contact the local Kawasaki dealer.

1. **COVERAGE.**
   a. Any factory-installed engine part found to be defective by Kawasaki within the thirty-six (36) month warranty term shall be repaired or replaced without charge for parts or labor at any authorized Kawasaki engine dealer located within the purchase area.
2. **OWNER'S OBLIGATIONS.** The following obligations must be fulfilled by owner to maintain the validity of the Kawasaki limited warranty:
   a. Owner must deliver the four-cycle engine to an authorized Kawasaki engine dealer or equally qualified service facility for inspection, maintenance services and adjustments according to the Periodic Maintenance Chart contained in the owner's manual. The inspection, maintenance services and adjustments are to be performed at owner's expense.
   b. Owner must present proof of initial retail purchase date to an authorized Kawasaki engine dealer at the time warranty repairs are performed on the four-cycle engine.
3. **LIMITATIONS.** This limited warranty shall not apply to or include any of the following:
   a. Repair or replacement required as a result of (i) accident, (ii) misuse or neglect, (iii) lack of reasonable and proper maintenance, (iv) repairs improperly performed or replacements improperly installed, (v) use of replacement parts or accessories not conforming to Kawasaki specifications which adversely affect performance and/or durability, (vi) alterations or modifications not recommended or approved in writing by Kawasaki, and/or (vii) wear and deterioration occasioned by the use of the four-cycle engine.
   b. Routine maintenance services, adjustments, cleaning and/or expendables such as spark plugs, lubricants, oil filters, air filters, and fuel filters.
4. **LIMITED LIABILITY**.
   a. The liability of Kawasaki under the thirty-six (36) month warranty is limited solely to the remedying of defects in factory-installed engine parts by an authorized Kawasaki engine dealer at its place of business during customary business hours. This warranty does not cover inconvenience or loss of use of the four-cycle engine or transportation of the four-cycle engine to and from the Kawasaki dealer. KAWASAKI SHALL NOT BE LIABLE FOR ANY OTHER EXPENSE, LOSS OR DAMAGE, WHETHER DIRECT, INCIDENTAL, CONSEQUENTIAL OR EXEMPLARY ARISING IN CONNECTION WITH THE SALE OR USE OF OR INABILITY TO USE THE KAWASAKI FOUR-CYCLE ENGINE FOR ANY PURPOSE. SOME STATES DO NOT ALLOW THE EXCLUSION OR LIMITATIONS OF ANY INCIDENTAL OR CONSEQUENTIAL DAMAGES, SO THE ABOVE LIMITATION OR EXCLUSION MAY NOT APPLY TO YOU.
   b. NO EXPRESS WARRANTY IS GIVEN BY KAWASAKI WITH RESPECT TO THE KAWASAKI FOUR-CYCLE ENGINE EXCEPT AS SPECIFICALLY SET FORTH HEREIN. ANY WARRANTY IMPLIED BY LAW, INCLUDING ANY WARRANTY OF MERCHANTABILITY OR FITNESS FOR A PARTICULAR PURPOSE, IS EXPRESSLY LIMITED TO THE THIRTY-SIX (36) MONTH WARRANTY TERM SET FORTH HEREIN. THE FOREGOING STATEMENTS OF WARRANTY ARE EXCLUSIVE AND IN LIEU OF ALL OTHER REMEDIES. SOME STATES DO NOT ALLOW LIMITATIONS ON HOW LONG AN IMPLIED WARRANTY LASTS, SO THE ABOVE LIMITATIONS MAY NOT APPLY TO YOU.
   c. No distributor, dealer or other four-cycle engine reseller is authorized to modify this Kawasaki Limited Four-Cycle Warranty.
5. **LEGAL RIGHTS.** THIS WARRANTY GIVES YOU SPECIFIC LEGAL RIGHTS, AND YOU MAY ALSO HAVE OTHER RIGHTS WHICH VARY FROM STATE TO STATE .

Effective 9/1/2017 P/N 99969-6443

EMISSION CONTROL SYSTEM WARRANTY STATEMENT

This warranty statement outlines the emission warranty coverage provided by Kawasaki Motors Corp U S A ("Kawasaki") for small off-road engines sold in the U S and its territories, as well as the 13 provinces and territories of Canada This warranty statement is divided into two parts Part I warrants that a new Kawasaki small off-road engine complies with U S EPA and Environment Canada emissions regulations Part II warrants that a new Kawasaki small off-road engine certified for sale in California also complies with the State of California's emissions regulations

Part I: United States and Canada

Your Warranty Rights and Obligations

Your new small off-road engine must be designed, built and equipped to meet the U S EPA emission standards for small off-road engines with maximum engine power at or below 19 kilowatts or an engine displacement less than 1 liter Kawasaki must warrant the emission control system on your small off-road engine for the period of time listed below, provided there has been no abuse, neglect, or improper maintenance of your small off-road engine Where a warrantable condition exists, Kawasaki will repair your small off-road engine at no cost to you including diagnosis, parts, and labor

Your emission control system may include such parts as the carburetor or fuel injection system, the ignition system, and catalytic converter Also included may be hoses, connectors, and other emission-related assemblies For a list of the emission control system parts covered under this warranty, please contact your nearest Kawasaki Dealer or contact Kawasaki directly at 877-364-6404

Warranty Coverage

Kawasaki warrants to the original retail purchaser, and each subsequent purchaser, that the small off-road engine, including all parts of its emission control system, is

1 designed, built, and equipped to conform to the U S EPA and Environment Canada emission standards at the time of sale to the original retail purchaser, and
2 free from defects in materials and workmanship that may keep it from meeting the requirements under these emission standards

This warranty begins on the date the small off-road engine is delivered to the original retail purchaser and extends for a period of three years This warranty covers all components whose failure would increase the emissions of any regulated pollutant This warranty does not cover components whose failure would not increase the engine's emissions of any regulated pollutants

Owner's Warranty Responsibility

As the small off-road engine owner, you are responsible for the performance of the required maintenance listed in your owner's manual Kawasaki recommends that you retain all receipts covering maintenance on your small off-road engine, but Kawasaki cannot deny warranty coverage solely for the lack of receipts or for your failure to ensure the performance of all scheduled maintenance

As the small off-road engine owner, you should, however, be aware that Kawasaki may deny you warranty coverage if your small off-road engine or a part has failed due to abuse, neglect, improper maintenance, or unapproved modifications

You are responsible for presenting your small off-road engine to a Kawasaki dealer as soon as a problem exists The emission related warranty repairs should be completed in a reasonable amount of time, not to exceed 30 days

If you have any questions regarding your emission warranty rights and responsibilities, you should contact

Kawasaki Motors Corp U S A
Consumer Services Department
5080 36th Street S E
Grand Rapids, MI 49512
Telephone (877) 364-6404
Email kawpower-website@kmc-usa com

To Obtain Warranty Service

You must, at your own expense, take your Kawasaki small off-road engine or the product on which it is installed, along with proof of original purchase date, to any Kawasaki Dealer who is authorized by Kawasaki to sell and service that Kawasaki product during the Dealer's normal business hours Claims for repair or adjustments found to be caused solely by defects in material or workmanship will not be denied because the engine was not properly maintained and used

If however, you reside more than 100 miles from an authorized service center in the contiguous states, excluding certain high-altitude areas, Kawasaki will either pay for shipping costs to and from an authorized service center, provide for a service technician to come to the owner to make the warranty repair, or pay for the repair to be made at a local non-authorized service center If you are unable to obtain emission warranty service or are dissatisfied with the warranty service you received, contact the owner of the dealership involved However, if you require further assistance, contact Kawasaki directly via the contact information above

Exclusions

Failures other than those resulting from defects in material or workmanship are not covered by this warranty This warranty does not extend to emission control systems and parts that are affected or damaged by owner abuse, misuse, neglect, improper maintenance or repairs, misfueling, improper storage, collision, the use of unsuitable attachments, or the unauthorized alteration of any part

This warranty does not cover replacement of parts or other services and adjustments necessary for required maintenance at and after the first scheduled replacement point

Disclaimer of Consequential Damages and Limitation of Implied Warranties

Kawasaki Motors Corp disclaims responsibility for incidental or consequential damages such as loss of time or the use of the power equipment, or any commercial loss due to the failure of the equipment, and any implied warranties are limited to the duration of this written warranty This warranty is applicable only where the California, U S EPA, or Environment Canada emission control system warranty regulation is in effect

Part II: CALIFORNIA EMISSIONS CONTROL WARRANTY STATEMENT

Your Warranty Rights and Obligations

The California Air Resources Board and Kawasaki are pleased to explain the emission control system warranty on your model year 2023/2024 small off-road engine In California, new small off-road engines must be designed, built, and equipped to meet the State's stringent anti-smog standards Kawasaki must warrant the emission control system on your small off-road engine for the periods of time listed below provided there has been no abuse, neglect or improper maintenance of your small off-road engine

Your emission control system may include such parts as the carburetor or fuel injection system, the ignition system, and catalytic converter Also included may be hoses, belts, connectors, and other emission-related assemblies

Where a warrantable condition exists, Kawasaki will repair your small off-road engine at no cost to you including diagnosis, parts and labor

Manufacturer's Warranty Coverage

The 1995 and later small off-road engines are warranted for three years If any emission-related part on your small off-road engine is defective, the part will be repaired or replaced by Kawasaki

Owner's Warranty Responsibility

As the small off-road engine owner, you are responsible for the performance of the required maintenance listed in your owner's manual Kawasaki recommends that you retain all receipts covering maintenance on your small off-road engine, but Kawasaki cannot deny warranty coverage solely for the lack of receipts or for your failure to ensure the performance of all scheduled maintenance

As the small off-road engine owner, you should however be aware that Kawasaki may deny you warranty coverage if your small off-road engine or a part has failed due to abuse, neglect, improper maintenance, or unapproved modifications

You are responsible for presenting your small off-road engine to a Kawasaki distribution center as soon as a problem exists The warranty repairs should be completed in a reason-able amount of time, not to exceed 30 days

If you have any questions regarding your warranty rights and responsibilities, you should contact

Kawasaki Motors Corp U S A
Consumer Services Department
5080 36th Street S E
Grand Rapids, MI 49512
Telephone (877) 364-6404
Email kawpower-website@kmc-usa com

General Emissions Warranty Coverage

Kawasaki warrants to the ultimate purchaser and each subsequent purchaser that the small off-road engine is

1. designed, built, and equipped so as to conform with all applicable regulations adopted by the Air Resources Board pursuant to its authority in Chapters 1 and 2, Part 5, Division 26 of the Health and Safety Code, and
2. free from defects in materials and workmanship that cause the failure of a warranted part to be identical in all material respects to the part as described in Kawasaki's application for certification

The warranty period begins on the date the engine or equipment is delivered to an ultimate purchaser or first placed into service The equipment or engine owner will not be charged for diagnostic labor that is directly associated with diagnosis of a defective, emission-related warranted part, provided that such diagnostic work is performed at a Kawasaki warranty station

Engine parts outlined in the Periodic Maintenance Chart found in the Owners Manual provided with this engine, are warranted as follows

1. Any warranted part that is not scheduled for replacement as required maintenance in the Periodic Maintenance Chart, is warranted for the warranty period stated above If any such part fails during the warranty period, the part will be repaired or replaced by Kawasaki at no charge to the owner provided the repair or replacement is performed at a warranty station Any such part repaired or replaced under the warranty will be warranted for the remaining warranty period
2. Any warranted part that is scheduled only for regular inspection in the Periodic Maintenance Chart is warranted for the warranty period stated above Any such part repaired or replaced under warranty will be warranted for the remaining warranty period
3. Any warranted part that is scheduled for replacement as required maintenance in the Periodic Maintenance Chart is warranted for the period of time before the first scheduled replacement date for that part If the part fails before the first scheduled replacement, the part will be repaired or replaced by Kawasaki at no charge to the owner provided the repair or replacement is performed at a warranty station Any such part repaired or replaced under warranty will be warranted for the remainder of the period prior to the first scheduled replacement point for the part

Kawasaki is liable for damages to other engine components proximately caused by a failure under warranty of any warranted part

Throughout the engine's warranty period defined above, Kawasaki will maintain a supply of warranted parts sufficient to meet the expected demand for such parts Any replacement part may be used in the performance of any warranty maintenance or repairs and will be provided without charge to the owner Such use will not reduce the warranty obligations of Kawasaki

Add-on or modified parts, as defined in Section 1900(b)(1) and (b)(14), Title 13, that are not exempted by the Air Resources Board may not be used The use of any non-exempted add-on or modified parts by the ultimate purchaser will be grounds for disallowing a warranty claim made in accordance with this article Kawasaki will not be liable under this article to warrant failures of warranted parts caused by the use of a non-exempted add-on or modified part

To Obtain Warranty Service

Notwithstanding the provisions herein, warranty services or repairs will be provided at all Kawasaki distribution centers that are franchised to service the subject engines

You must, at your own expense, take your Kawasaki small off-road engine or the product on which it is installed, along with proof of original purchase date, to any Kawasaki Dealer who is authorized by Kawasaki to sell and service that Kawasaki product during the Dealer's normal business hours Claims for repair or adjustments found to be caused solely by defects in material or workmanship will not be denied because the engine was not properly maintained and used

If you are unable to obtain emission warranty service or are dissatisfied with the warranty service you received, contact the owner of the dealership involved However, if you require further assistance, contact the Kawasaki office in your region

Kawasaki Motors Corp , U S A
Consumer Serv ces Department
5080 36th Street S E
Grand Rapids, MI 49512
Telephone (877) 364-6404
Email kawpower-website@kmc-usa com

Exclusions

1. The repair or replacement of any warranted part otherwise eligible for warranty coverage as stated above may be excluded from such warranty coverage if Kawasaki demonstrates that the engine has been abused, neglected, or improperly maintained, and that such abuse, neglect or improper maintenance was the direct cause of the need for repair or replacement of the part
2. Kawasaki warrants your engine only for the warranty period specified above
3. Except as provided above, any adjustment of a component that has a factory installed, and properly operating, adjustment limiting device (such as an idle limiter cap or plug) is eligible for warranty coverage as stated above

Disclaimer of Consequential Damage and Limitation of Implied Warranties:

Kawasaki Motors Corp disclaims responsibility for incidental or consequential damages such as loss of time or the use of the power equipment, or any commercial loss due to the failure of the equipment, and any implied warranties are limited to the duration of this written warranty This warranty is applicable only where the California, U S EPA, or Environment Canada emission control system warranty regulation is in effect

Warranted Parts List.

The following is the emission warranty parts list for your small off-road engine

- (i) Fuel Metering System
  - (A) Carburetor and internal parts (and/or pressure regulator or fuel injection system)
  - (B) Cold start enrichment system
  - (C) Intake valve(s)
- (ii) Air Induction System
  - (A) Intake manifold
  - (B) Air filter
- (iii) Ignition System
  - (A) Spark plugs
  - (B) Magneto or electronic ignition system
  - (C) Spark advance/retard system
  - (D) Ignition coil and/or control module
- (iv) Lubrication System
  - (A) Oil pump and internal parts
- (v) Positive Crankcase Ventilation (PCV) System
  - (A) PCV valve
  - (B) Oil filler cap
- (vi) Catalyst or Thermal Reactor System
  - (A) Catalytic converter
  - (B) Exhaust manifold
  - (C) Exhaust valve(s)
- (vii) Miscellaneous Items Used in Above Systems
  - (A) Hoses, clamps, fittings, tubing, sealing gaskets or devices, and mounting hardware
  - (B) Pulleys, belts and idlers
  - (C) Vacuum, temperature, check, and time sensitive valves and switches
  - (D) Electronic Controls

Emissions related parts may vary from model to model Certain models may not contain all of those parts and certain models may contain functionally equivalent parts

Kawasaki Motors Corp , U S A
Consumer Services Department
5080 36th Street S E
Grand Rapids, MI 49512
Telephone (877) 364-6404
Email kawpower-website@kmc-usa com

HYDRO-GEAR®

FORWARD MOTION THROUGH FORWARD THINKING

All Models

Warranty

Policies and Procedures

BLN-50225_P18
Revision March, 2019

Hydro-Gear® Warranty Policies and Procedures

Limited Warranty

BLN-50225_P18 March, 2019

Hydro-Gear Limited Partnership (hereinafter referred to as "Hydro-Gear") warrants to the original equipment manufacturer (OEM), authorized distributor, or authorized servicing dealer purchasing a Hydro-Gear product or replacement parts (such purchaser is hereinafter referred to as "Buyer") that the product or replacement parts will be free from defects in material and workmanship at the time of shipment from Hydro-Gear, and will conform to such drawings and - tions as are applicable to the product or replacement parts under Hydro-Gear's sales agreement with Buyer.

The duration of this limited warranty is as set forth in the section below under the heading "WARRANTY PERIODS." During the applicable period of warranty, Hydro-Gear shall repair or replace at its option those products or their parts which are found by Hydro-Gear to be defective in material or workmanship at time of shipment, provided that Hydro-Gear or its authorized representative is advised in writing of Buyer's contention of such defect (during such warranty period) and provided further, that the product or, if applicable, the replacement part in question is made available for inspection by Hydro-Gear or its authorized representative. To facilitate inspection, Hydro-Gear may request return of the product and/or part which Buyer contends to be defective. Product or parts failures or malfunctions which are not attributable to defects in material and/or workmanship, and which are not covered by the said warranty include, but are not limited to:

*

* Accident, abuse, improper maintenance, or neglect.
* Stripped keyways, or splines stripped or worn on external shaft end.
* Improper mounting of external pulleys, gears, couplings, etc.
* Improper electrical connection or power supply.
* Corrosion, or other damage, resulting from battery acid leakage.
* Operating above those speeds, weights limits, pressures, or temperatures recommended by Hydro-Gear.
* Use of the product in a manner or for a purpose not originally intended for by Hydro-Gear or failure to use in strict accordance with Hydro-Gear's written instructions.
* Repairs or installation by personnel other than as authorized by Hydro-Gear.
* Transportation.
* Use of parts other than Genuine Hydro-Gear Parts or other parts authorized in writing by Hydro-Gear.
* Misdiagnosis of component failure.

*

THE WARRANTIES SET FORTH HEREIN ARE IN LIEU OF AND TO THE EXCLUSION OF ALL OTHER WARRANTIES, WHETHER EXPRESS, IMPLIED, OR STATUTORY, INCLUDING BUT NOT BY WAY OF LIMITATION, WARRANTIES OF MERCHANTABILITY OR FITNESS FOR A PARTICULAR PURPOSE.

HYDRO-GEAR'S LIABILITY, WHETHER OF WARRANTY, NEGLIGENCE, OR OTHERWISE, IS LIMITED TO THE REPAIR OR REPLACEMENT AS HEREIN PROVIDED OR, AT HYDRO-GEAR'S SOLE OPTION, TO A REFUND OF THE PURCHASE PRICE. **THIS SHALL BE HYDRO-GEAR'S SOLE AND MAXIMUM LIABILITY AND UNDER NO CIRCUMSTANCES SHALL HYDRO-GEAR BE LIABLE FOR LIQUIDATED, SPECIAL, INCIDENTAL OR CONSEQUENTIAL DAMAGES.**

If Buyer grants warranty on Hydro-Gear products of greater scope than the warranties provided by Hydro-Gear, or extends any warranty period beyond the applicable period described in **"WARRANTY PERIODS,"** Buyer does so at its sole risk and expense and Buyer will indemnify and hold Hydro-Gear harmless from any claims of any party based on such greater warranty or period, and any expenses incurred in the defense of such claims. This warranty only applies to OEM's, authorized distributors, authorized servicing dealers, and by its terms does not extend to any person buying the product from such OEM, authorized distributor, or authorized servicing dealer, for personal, family, or household use. If Buyer makes available the of this warranty to its customer, and if the Magnuson-Moss Warranty Improvement Act (Pub. L. 93-637) or similar state laws should apply, Buyer assumes all responsibility for compliance with such laws and any expenses incurred in the defense of any such claims, thereunder.

All Models	Hydro-Gear® Warranty Policies and Procedures
Warranty Periods	BLN-50225_P18 March, 2019

Note: Proof of purchase must be available if requested to assist in determining commencement of the warranty period. If proof of purchase is not available, the Hydro-Gear Serial Number will determine the commencement of the warranty period.

I. ORIGINAL (OEM) INSTALLED PRODUCTS[Δ]

A. REVIEWED TWO YEAR NONCOMMERCIAL* USAGE *(See Figure 1, Hydro-Gear Warranty Time Frames)*
The warranty period shall be limited to the earlier of:
(i) 24 consecutive months (2 years) from the date of _____** of the product, or
(ii) 24 consecutive months (2 years) from the date of manufacture if proof of purchase is not available upon request, and is subject to a limitation of 48 consecutive months (4 years) from the date of manufacture.***

B. REVIEWED ONE YEAR COMMERCIAL USAGE *(See Figure 1, Hydro-Gear Warranty Time Frames)*
The warranty period shall be limited to the earlier of:
(i) 12 consecutive months (1 year) from the date of the _____ of the product, or
(ii) 90 days from the date of the _____ of the product on Rental applications; or
(iii) 12 consecutive months (1 year) from the date of manufacture if proof of purchase is not available upon request, and is subject to a limitation of 48 consecutive months (4 years) from the date of manufacture.

C. REVIEWED TWO YEAR COMMERCIAL USAGE *(See Figure 1, Hydro-Gear Warranty Time Frames)*
The warranty period shall be limited to the earlier of:
(i) 24 consecutive months (2 years) from the date of the _____ of the product, or
(ii) 90 days from the date of the _____ of the product on Rental applications; or
(iii) 24 consecutive months (2 years) from the date of manufacture if proof of purchase is not available upon request, and is subject to a limitation of 48 consecutive months (4 years) from the date of manufacture.

II. REPLACEMENT PARTS AND UNITS[Δ]

A. HYDRO-GEAR REPLACEMENT PARTS
(i) All parts shall be warranted for 90 days from the date of ____sale, or the balance of the original product warranty, whichever is longer.
(ii) This warranty is subject to a limitation of 48 consecutive months (4 years) from the date of manufacture.

B. HYDRO-GEAR REPLACEMENT UNITS
(i) Replacement units shall be warranted for 180 days from the date of ____sale, or the balance of the original product warranty, whichever is longer.
(ii) Nevertheless, the warranty period for replacement units in Rental applications is limited to 90 days from the date of _____.
(iii) These warranties for replacement units are subject to a limitation of 48 consecutive months (4 years) from the date of manufacture.

Δ All Product repairs and replacements must be performed by an authorized dealer or service center to prevent Hydro-Gear's warranty from being voided.

* Noncommercial - any vehicle not reviewed for commercial use by Hydro-Gear.

** First sale - is considered the date a vehicle, replacement part or replacement unit is sold by Buyer (OEM, authorized distributor, or authorized servicing dealer).

*** 48 consecutive months (4 years) from the date of manufacture – Any warranty period listed herein will remain in effect for its entire duration on any sale of the product by Buyer occurring up to 48 consecutive months (4 years) from the date of manufacture by Hydro-Gear. Hydro-Gear will not reimburse Buyer on warranty claims pertaining to products sold by Buyer more than 48 consecutive months (4 years) from the date of manufacture by Hydro-Gear. In the latter case, any warranty offered by Buyer is at the sole risk and expense of Buyer. In such case, Buyer will indemnify and hold Hydro-Gear harmless from the claims of any party based on such warranty, and from any expenses incurred in the defense of such claims.

Warranty Claims Procedure

A. Claims submitted to Hydro-Gear will require a Hydro-Gear, OEM, Outdoor Power Equipment Institute (OPEI) or equivalent claim form from the servicing dealer. Dealer claims must provide all pertinent information typical on OPEI claim forms, i.e.., owner's name, servicing dealer, Hydro-Gear Serial Numbers, symptoms, repair date, and type of use, etc.
B. Complete Hydro-Gear product Model Number and Serial Number must be provided.
C.
D. Warranty claims will be processed in accordance with: BLN-51371 for the United States and Canada; BLN-51373 for Europe, and BLN-51374 for Australia.
E. Hydro-Gear reserves the right to reduce or reject a warranty claim which does not comply with the stated procedures.
F. Warranty labor rate(s) will be set by Hydro-Gear.
G. Labor rate time guidelines will be as follows:

Hydraulic Units	
Hydraulic Unit Replacement	Up to Two hours maximum
Hydraulic External Repair	Up to One hour maximum
Hydraulic Internal Repair	Up to Three hours maximum

Electric Units	
Electric Unit (Transaxle) Replacement	Up to Two hours maximum
Electric Unit (Transaxle) External Repair	Up to One hour maximum
Electric Unit (Transaxle) Internal Repair	Up to Three hours maximum
Electric Component Replacement or Repair	Up to One hour maximum

	Hydro-Gear Warranty Time Frames		
Hydraulic Product Group	**2 Year Noncommercial Usage**	**1 Year Commercial Usage**	**2 Year Commercial Usage**
ZT-1800 / ZT-2100 / ZT-2200 (EZT) ZT-2800	Yes	No	No
ZT-3100 / ZT-3200	Yes	Yes	No
ZT-3400 / ZT-3600 / ZT-3800 / ZT-4400 / ZT-5400	Yes	-	Yes
SST	Yes	No	No
RT-310	Yes	Yes	No
T1 / T2 / T3	Yes	No	No
310-0510 / 310-0610 / 310-0710	Yes	No	No
310-2000 / G700 / 310-3000 / 310-3500	Yes	No	No
Pumps (PC)	Yes	Yes	No
Pumps (PJ, PE, PL, PG, PK, PR, PW, PY)	Yes	-	Yes
Piston Motor (HGM-H, PRM)	Yes	-	Yes

Figure 1: Hydraulic Warranty Time Frames

	Smartec Warranty Time Frames		
Electric Product Group	**2 Year Noncommercial Usage**	**1 Year Commercial Usage**	**2 Year Commercial Usage**
Electric Drive - ZT	Yes	No	No
Electric Drive - LT	Yes	No	No

Figure 2: Smartec Warranty Time Frames

a) All warranty times listed in Figures 1 & 2 are for products originally installed in a machine by an OEM manufacturer.
b) See sections I(B), I(C), II(A) and II(B) on the **Warranty Periods** page for Rental Application, Replacement Part, and Replacement Unit warranty information.

Battery Warranty Terms

The OE Interstate Battery will be covered under a free replacement warranty for 6 months. This warranty period will begin the date the lawnmower is purchased by the end user.

Battery Warranty Process

If you have a lawnmower that won't start, please complete these steps before calling for a warranty replacement. Completion of these steps before calling will expedite the warranty process.

1. Check the voltage of the battery. If the voltage reading is at or below 12.60 volts, the battery is most likely discharged and needs a slow recharge. If this is the case, move to step 2. If your battery's voltage is above 12.60 volts, move to step 5.
2. Charge the battery with a slow charger (4 amps or less). If you have an automatic shut-off charger, connect the battery to the charger and let the charger complete its charge cycle. If using a manual charger, utilize the following chart to determine necessary recharge time (a 15-60 minute charge WILL NOT be a sufficient recharge for a discharged battery and will be refused for warranty):

Open Circuit Voltage

Battery Voltage	State of Charge	Recommended Charge Time (Hours)		
		1 Amp	2 Amps	4 Amps*
12.84	100%	0	0	0
12.60	70%	20	10	5
12.40	50%	32	16	8
12.20	25%	52	26	13
12.00	0%	72	36	18

3. Once recommended charging time is complete, let battery rest for as long as possible (up to 24 hours) to deplete surface charge and increase testing accuracy.
4. Check voltage again. If the battery's voltage is still below 12.60 volts, repeat step 2. If voltage is above 12.60 volts, move to step 5.
5. Load test the battery according the instructions of your load tester and to the ratings of the battery. If the battery passes the load test, it can be re-installed in the lawnmower.
6. If the battery fails the load test, please contact Interstate Batteries at the number below to process the warranty battery. Please have the battery with you as the part number and manufacturer's date code will be required.

Interstate Batteries of NWMO
(816) 424-3417
sales@myinterstatestore.com

MY2027 SPECIFICATIONS

XLT – *Joystick Steering*

MODEL	2448KAJ - C330 / C330W	2452KAJ - C330 / C330W	2460KAJ - C330 / C330W
Engine	24hp Kawasaki FR730V (726cc)		
Hydrostatic Transmissions	Hydro-Gear ZT-3100		
Steering Control	Single Joystick		
Fuel Capacity	5 Gallons		
Tires, Rear	22 x 9.5-10	22 x 11-10	
Tires, Front	13 x 6.5-6		
Turning Radius	Zero-Turn		
Ground Speed Forward Reverse	8 MPH (infinitely variable) 4 MPH (infinitely variable)		
Length	79”		
Height,	33” (Seat Cushion), 48” (Seat Back)		
Width, Tractor (outside rear tires)	47”	49”	
Width, Deck (with deck chute up) (with deck chute down)	49” 61”	53” 65”	61” 73”
Cutting Width	48”	52”	60”
Blade Length (3 per deck)	17”	18-3/8”	21”
Cutting Height	1-1/2” to 5” (¼” increments)		
Weight (actual)	811#	833#	838#
Standard Features	Hour Meter, Cup Holder, Electric Start, Sewn Seat, Hinged (RH) Arm Rest (Adjustable), Front Step, ContourDTS Deck Suspension, Hitch Plate, and Auto Detach Stand-Up Deck		

XLT – *Twinstick Steering*

MODEL	2448KAT - C330 / C330W	2452KAT - C330 / C330W	2460KAT - C330 / C330W
Engine	24hp Kawasaki FR730V (726cc)		
Hydrostatic Transmissions	Hydro-Gear ZT-3100		
Steering Control	Twinstick Controls		
Fuel Capacity	5 Gallons		
Tires, Rear	22 x 9.5-10	22 x 11-10	
Tires, Front	13 x 6.5-6		
Turning Radius	Zero-Turn		
Ground Speed Forward Reverse	8 MPH (infinitely variable) 4 MPH (infinitely variable)		
Length	79”		
Height,	33” (Seat Cushion), 48” (Seat Back)		
Width, Tractor (outside rear tires)	47”	49”	
Width, Deck (with deck chute up) (with deck chute down)	49” 61”	53” 65”	61” 73”
Cutting Width	48”	52”	60”
Blade Length (3 per deck)	17”	18-3/8”	21”
Cutting Height	1-1/2” to 5” (¼” increments)		
Weight (actual)	816#	838#	843#
Standard Features	Hour Meter, Cup Holder, Electric Start, Sewn Seat, Hinged Arm Rests (Adjustable), Front Step, ContourDTS Deck Suspension, Hitch Plate, and Auto Detach Stand-Up Deck		

Specifications subject to change without prior notice

PRODUCT MANUAL

XLT

C330 / C330W

Country Clipper Division
Shivvers Manufacturing, Inc.
613 W. English St.
Corydon, IA 50060-0467
Ph. 641-872-2544
Fax. 641-872-1593

P-13823 (Rev B)