Repair Parts

COUNTRY CLIPPER
ZERO TURN MOWER

XLT

C330 / C330W

SERIAL RANGE: 26264001 - _____

P-13823 (Rev B)

COUNTRY CLIPPER
XLT - C330 / C330W
SERIAL RANGE 26264001 - _____
ZERO TURN RADIUS MOWER
TABLE OF CONTENTS

SECTION 1 – MOWER DECKS AND RELATED PARTS

1. 48” DECK ASSEMBLY
2. 52” DECK ASSEMBLY
3. 60” DECK ASSEMBLY
4. DISCHARGE CHUTE ASSEMBLY
5. DECK SPINDLE ASSEMBLY
6. DOUBLE IDLER DRIVE BELT IDLER
7. BELT TENSION LEVER
8. FIXED IDLERS & RELATED PARTS
9. DECK LIFT ASSEMBLY & RELATED PARTS
10. DECK LIFT ASSEMBLY & RELATED PARTS (CON’T)
11. CUT HEIGHT ASSEMBLY & RELATED PARTS

SECTION 2 – TRACTOR FRAME AND RELATED PARTS

12. PIVOTING FRONT AXLE & FOOT PAN
13. TIRES AND FRONT STEP
14. FRONT PANEL ASSEMBLY & RELATED PARTS
15. FRONT PANEL ASSEMBLY & RELATED PARTS (CON’T)
16. BATTERY BOX & ARM REST BRACES
17. BRAKE ASSEMBLY
18. BRAKE ASSEMBLY (CON’T)

SECTION 3 – TRACTOR DRIVE AND RELATED PARTS

19. FUEL TANK ASSEMBLY
20. JOYSTICK CONTROL & RELATED PARTS
21. JOYSTICK ASSEMBLY
22. JOYSTICK ASSEMBLY MOUNTING & RELATED PARTS
23. TWIN LEVER CONTROL & RELATED PARTS
24. TWIN LEVER ASSEMBLY
25. CONTROL PANEL
26. FENDER ASSEMBLY & RELATED PARTS
27. TRANSMISSION ASSEMBLY & RELATED PARTS
28. DAMPER, OFFSET BRACKET, & RETURN TO NEUTRAL HARDWARE
29. SEAT BASE & RELATED PARTS
30. SEAT, ARM RESTS & RELATED PARTS
31. ENGINE
32. ENGINE & CLUTCH MOUNTING & RELATED PARTS
33. WIRE HARNESS & RELATED PARTS
34. WIRE HARNESS SCHEMATIC

Country Clipper Division, Shivvers Manufacturing Inc. 613 W English St. Corydon, IA 50060-0467 Ph. 641-872-2544 Fax. 641-872-1593

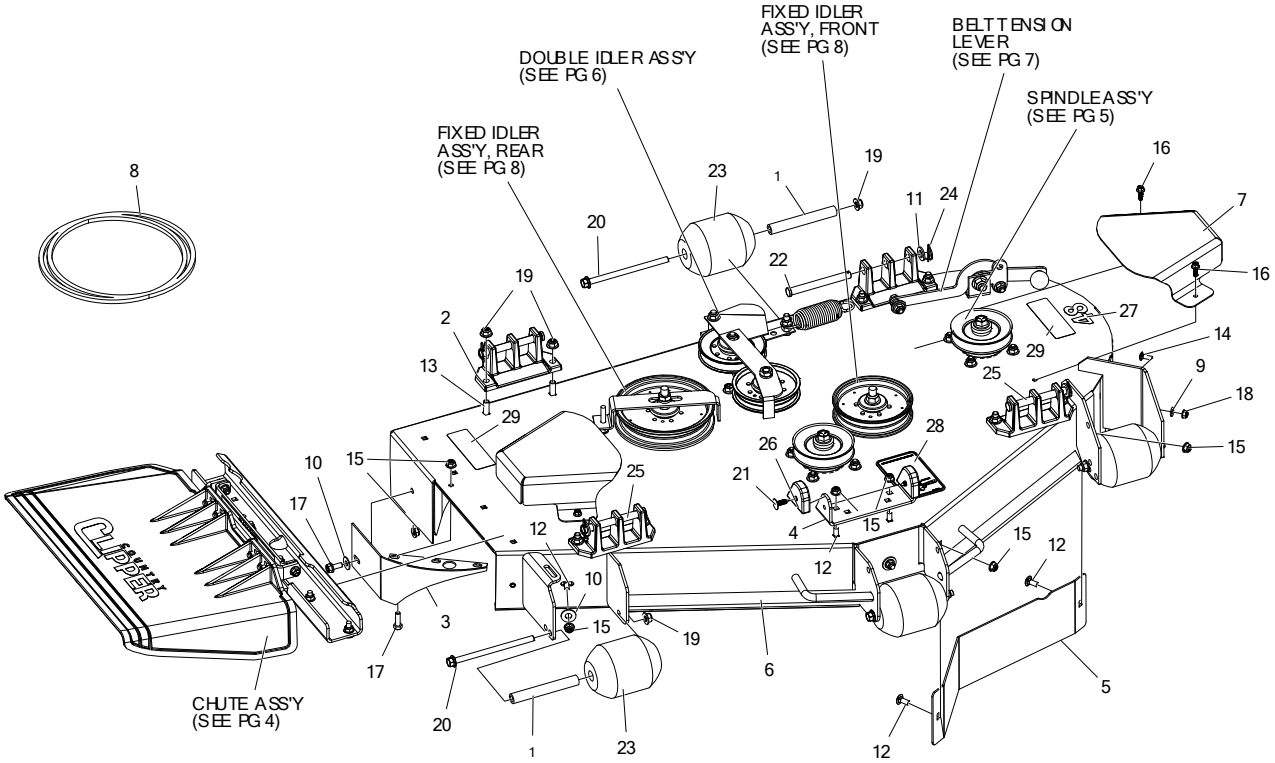

ITEM #	QTY	PART #	DESCRIPTION
1	5	609-183P	BUSHING
2	4	651-009W	DECK HANGER, WIDE BASE
3	1	686-080W	SPLITTER, DISCHARGE
4	1	722-034P	DECK STOP
5	1	722-041P	DEFLECTOR PLATE
6	1	722-053A	48" DECK W/ DECALS
7	2	722-033P	PULLEY COVER
8	1	D-3775-W	BELT B-158" KEVLAR WRAPPED
9	1	F-1009-01	FLAT WASHER, 1/4", YZ
10	3	F-1009-02	WASHER, FLAT
11	4	F-1521	WASHER, 1/2" CUSTOM, YZ
12	6	F-1671	CARRIAGE BOLT,5/16-18 X 3/4", YZ, GR5
13	8	F-1672	BOLT, CARRIAGE, 3/8-16 X 1-1/4", YZ, GR5
14	1	F-1823	BOLT, CARRIAGE, 1/4-20 X 3/4
15	9	F-2063	NUT, 5/16-18, NYLOC, FLANGED, YZ
16	4	F-2119	FHCS, 1/4-20 X 3/4", YZ, GR5, LOCK PATCH
17	3	F-2120	FHCS, 5/16-18 X 3/4", YZ, GR5
18	1	F-2132	NUT, 1/4-20 NYLOC, FLANGED, YZ
19	13	F-2151	NUT, 3/8-16 NYLOC, FLANGED, YZ
20	5	F-2161	FHCS, 3/18-16 X 6" YZ, GR5
21	2	F-2250	CLIP, FIR TREE, 1/4" X 1", BLACK NYLON
22	2	F-2389	1/2" X 5" CLEVIS PIN
23	5	H-1948	ROLLER, 3-3/4 DIA
24	4	H-2239	1/2" RUE RING
25	2	H-2240	1/2" X 4-1/2" CLEVIS PIN
26	2	H-3091	WEAR PAD
27	1	P-11950	DECAL, DECK SIZE, 48
28	1	P-12837	DECAL, DECK BELT ROUTING
29	2	P-13749	DECAL, DECK SAFETY

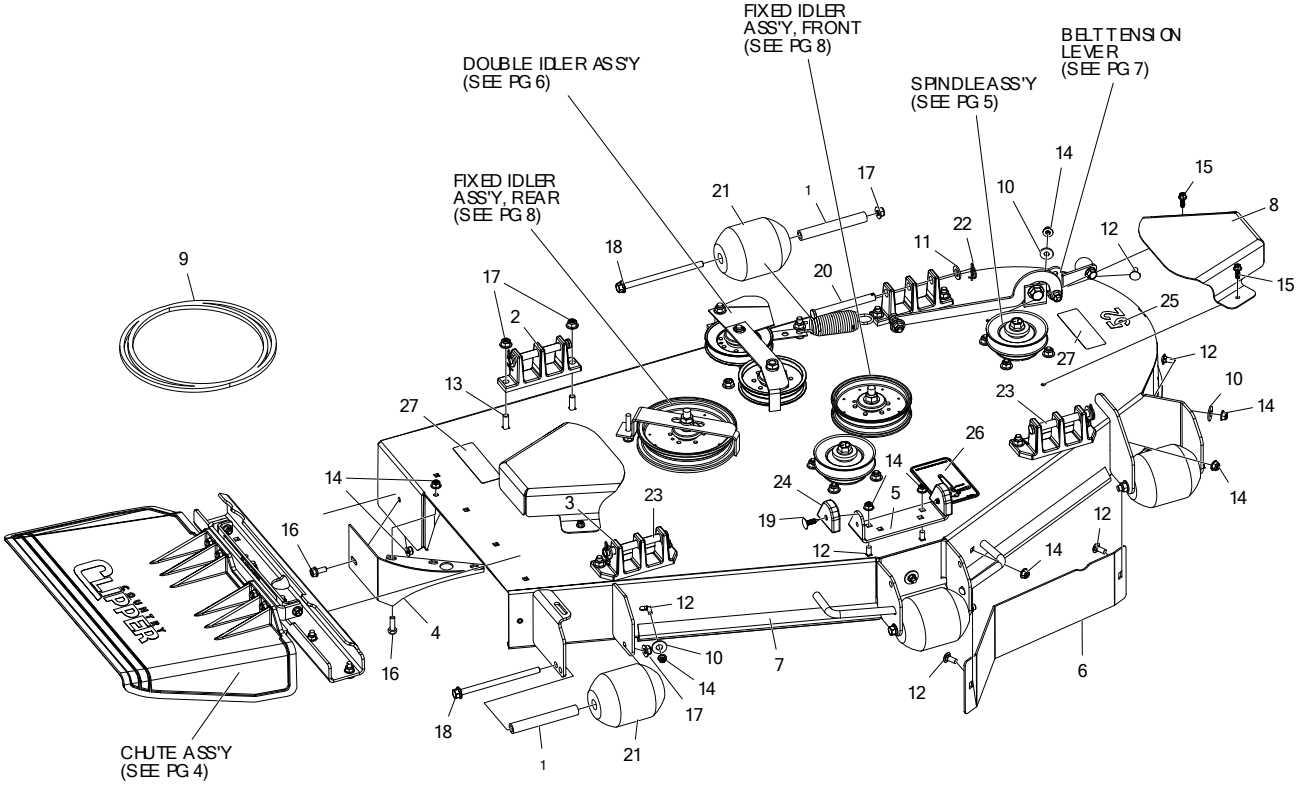

ITEM #	QTY	PART #	DESCRIPTION
1	5	609-183P	BUSHING
2	2	643-016W	DECK HANGER NARROW BASE
3	2	651-009W	DECK HANGER WIDE BASE
4	1	686-080W	SPLITTER DISCHARGE
5	1	722-034P	DECK STOP
6	1	722-041P	DEFLECTOR PLATE
7	1	722-054A	52" DECK W/ DECALS
8	2	722-033P	PULLEY COVER
9	1	D-3951	BANDL BELT B-166
10	5	F-1009-02	WASHER FLAT
11	4	F-1521	WASHER 1/2" CUSTOM YZ
12	8	F-1671	CARRIAGE BOLT 5/16-18 X 3/4" YZ, GR5
13	8	F-1672	BOLT CARRIAGE 3/8-16 X 1-1/4" YZ GR5
14	11	F-2063	NUT 5/16-18, NYLOC, FLANGED, YZ
15	4	F-2119	FHCS 1/4-20 X 3/4" YZ GR5 LOCK PATCH
16	3	F-2120	FHCS 5/16-18 X 3/4"X YZ, GR5
17	13	F-2151	NUT 3/8-16 NYLOC FLANGED YZ
18	5	F-2161	FHCS 3/18-16 X 6" YZ GR5
19	2	F-2250	CLIP FIR TREE 1/4" X 1" BLACK NYLON
20	2	F-2389	1/2" X 5" CLEVIS PIN
21	5	H-1948	ROLLER 3-3/4 DIA
22	4	H-2239	1/2" RUE RING
23	2	H-2240	1/2" X 4-1/2" CLEVIS PIN
24	2	H-3091	WEAR PAD
25	1	P-11951	DECAL DECK SIZE 52
26	1	P-12837	DECAL DECK BELT ROUTING
27	2	P-13749	DECAL, DECK SAFETY

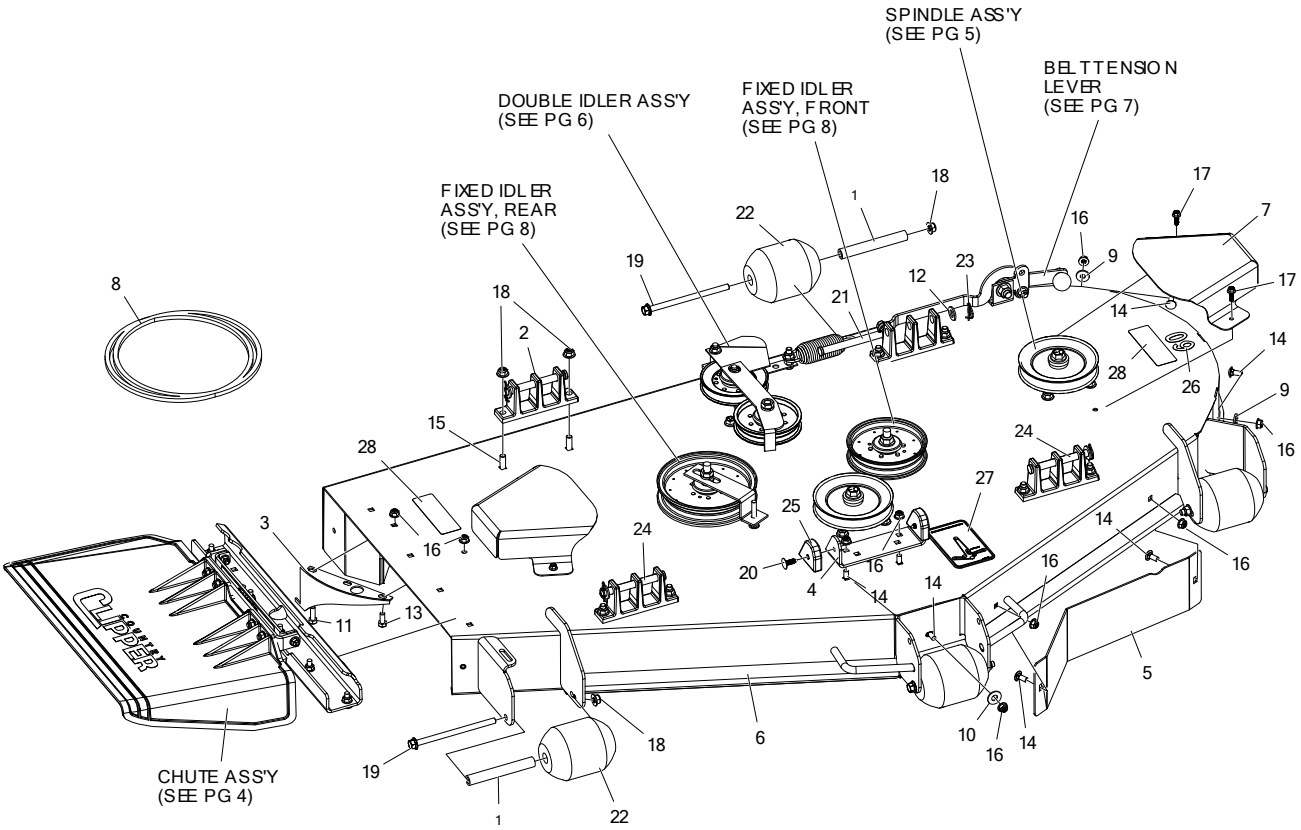

ITEM #	QTY	PART #	DESCRIPTION
1	5	609-183P	BUSHING
2	4	643-016W	DECK HANGER, NARROW BASE
3	1	686-006W	SPLITTER WELDMENT
4	1	722-034P	DECK STOP
5	1	722-041P	DEFLECTOR PLATE
6	1	722-055A	60" DECK W/ DECALS
7	2	722-033P	PULLEY COVER
8	1	D-3776-W	BELT B-180"
9	2	F-1009-02	WASHER FLAT
10	2	F-1009-03	WASHER, FLAT, 3/8, YZ
11	1	F-1015-15	HHCS, 5/16-18 X 1", YZ, GR5
12	4	F-1521	WASHER, 1/2" CUSTOM, YZ
13	1	F-1546	HHCS, 5/16-18 X 3/4"
14	8	F-1671	CARRIAGE BOLT,5/16-18 X 3/4", YZ, GR5
15	8	F-1672	BOLT, CARRIAGE, 3/8-16 X 1-1/4", YZ, GR5
16	10	F-2063	NUT, 5/16-18, NYLOC, FLANGED, YZ
17	4	F-2119	FHCS, 1/4-20 X 3/4", YZ, GR5, LOCK PATCH
18	13	F-2151	NUT, 3/8-16 NYLOC, FLANGED, YZ
19	5	F-2161	FHCS, 3/18-16 X 6" YZ, GR5
20	2	F-2250	CLIP, FIR TREE, 1/4" X 1", BLACK NYLON
21	2	F-2389	1/2" X 5" CLEVIS PIN
22	5	H-1948	ROLLER, 3-3/4 DIA
23	4	H-2239	1/2" RUE RING
24	2	H-2240	1/2" X 4-1/2" CLEVIS PIN
25	2	H-3091	WEAR PAD
26	1	P-11952	DECAL, DECK SIZE, 60
27	1	P-12837	DECAL, DECK BELT ROUTING
28	2	P-13749	DECAL, DECK SAFETY

DISCHARGE CHUTE ASS'Y
& RELATED PARTS

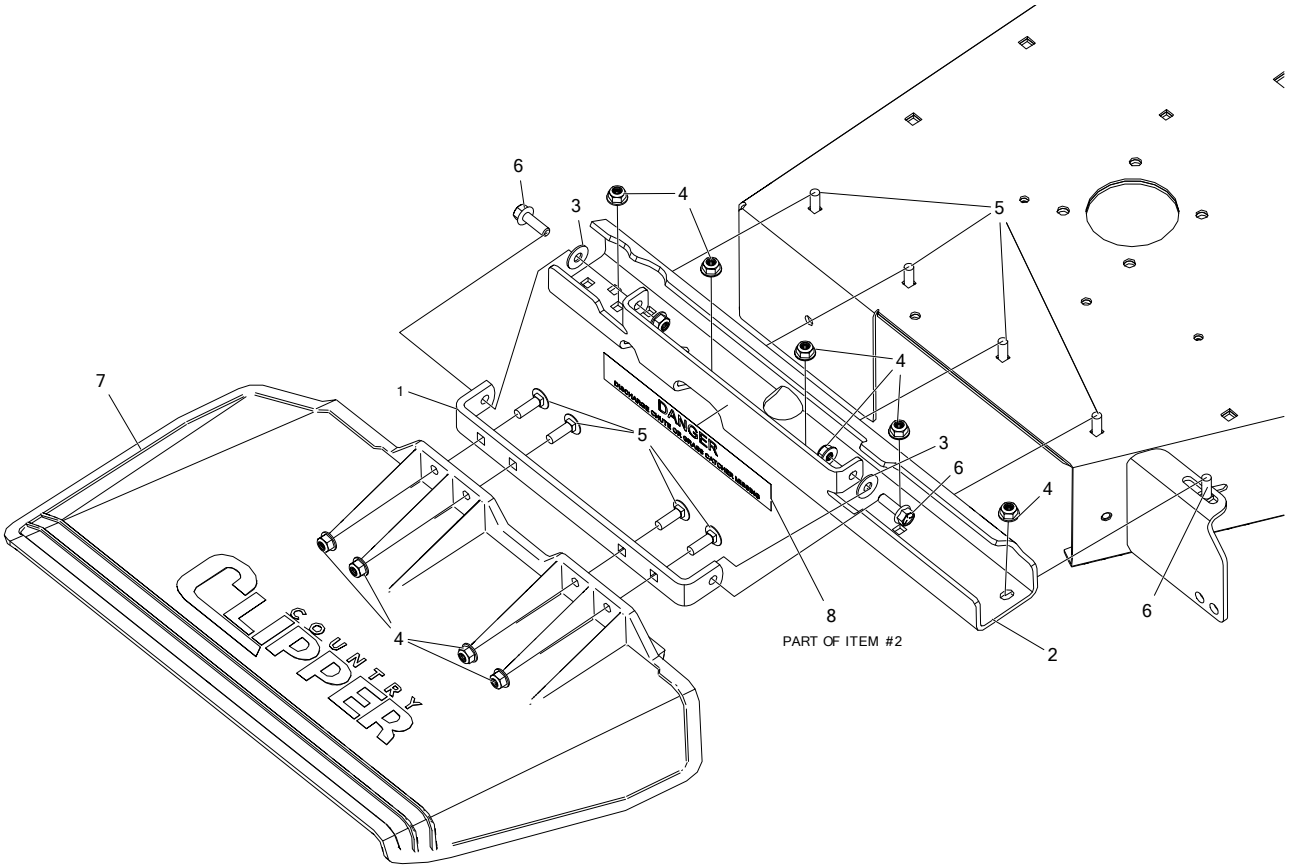

ITEM #	QTY	PART #	DESCRIPTION
1	1	643-110P	CHUTE HINGE
2	2	643-135A	OUTLET STIFFENER W/ DECALS, SMALL
3	2	F-1009-02	WASHER, FLAT
4	11	F-2063	NUT, 5/16-18, NYLOC, FLANGED, YZ
5	8	F-2066	BOLT, CARRIAGE, 5/16-18 X 1", YZ, GR5
6	3	F-2148	FHCS, 5/16-18 x 1", YZ, GR5
7	1	H-2723	CHUTE, DISCHARGE, SMALL
8	1	P-12496	DECAL, CHUTE MISSING

DECK SPINDLE ASSEMBLY {D-4020}

PARTS MARKED "*" ARE PART OF COMPLETE ASSEMBLY

BLADE PART NUMBERS

48” DECK
H-2882 HIGH LIFT W/O FUSION (STANDARD)
H-2659 LOW LIFT
H-2665 GATOR

52” DECK
H-2883 HIGH LIFT W/O FUSION (STANDARD)
H-2660 LOW LIFT
H-2666 GATOR

60” DECK
H-2885 HIGH LIFT W/O FUSION (STANDARD)
H-2661 LOW LIFT
H-2667 GATOR

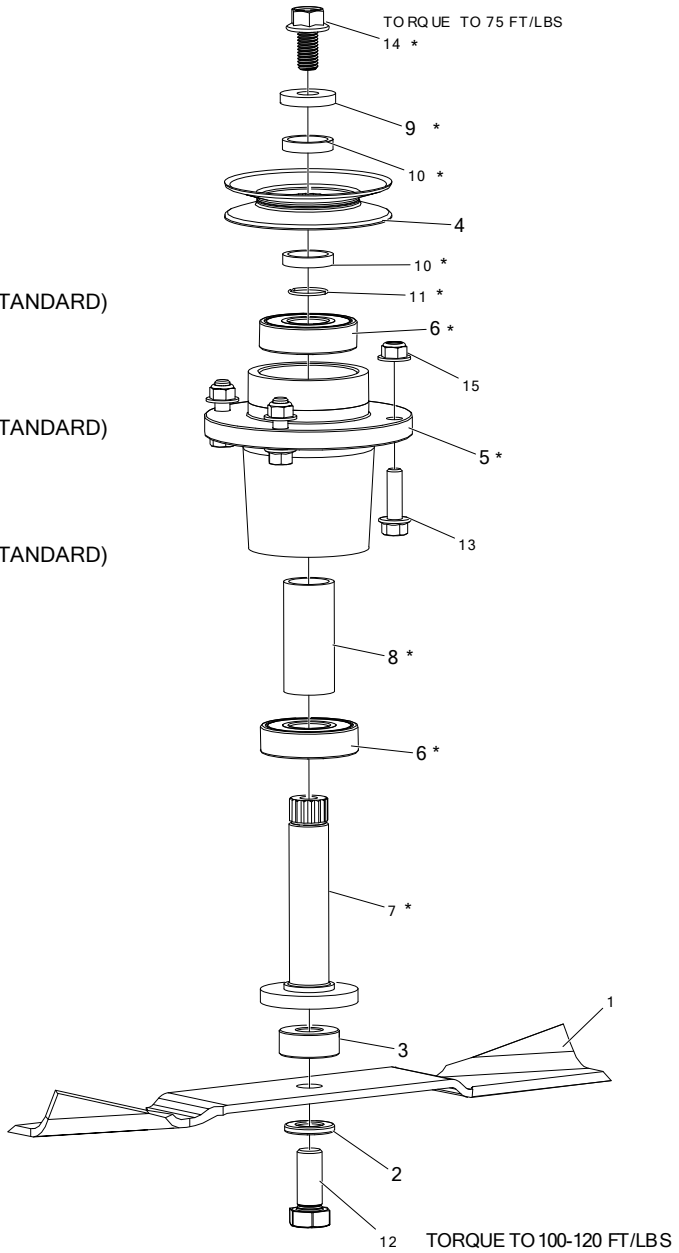

ITEM #	QTY	PART #	DESCRIPTION
1	1	H-2882	BLADE, HL, 16.928, 48 (STANDARD)
-	1	H-2883	BLADE, HL, 18.375, 52 (STANDARD)
-	1	H-2885	BLADE, HL, 20.953, 60 (STANDARD)
-	1	H-2659	BLADE, 16.928 X .63, LOW LIFT, 48
-	1	H-2660	BLADE, 18.375 X .63, LOW LIFT, 52
-	1	H-2661	BLADE, 20.953 X .63, LOW LIFT, 60
-	1	H-2665	BLADE, 16.928 X .63, GATOR, 48
-	1	H-2666	BLADE, 18.375 X .63, GATOR, 52
-	1	H-2667	BLADE, 20.86 X .63, GATOR, 60
2	1	660-099P	WASHER, BLADE, 5/8
3	1	660-206P	SPINDLE SPACER
4	1	D-3918	PULLEY, 5.195, A-B, 60" DECK
-	1	D-3920	PULLEY, 4.513, A-B, 52" DECK
-	1	D-3919	PULLEY, 4.039, A-B, 48" DECK

ITEM #	QTY	PART #	DESCRIPTION
5	1	----	SPINDLE HOUSING, MEDIUM DUTY
6	2	D-4020-2	BEARING, HCH 6305-2RS1
7	1	D-4020-3	SPINDLE SHAFT, MEDIUM DUTY
8	1	----	SPINDLE SPACER
9	1	D-4020-5	SPINDLE HARD WASHER
10	2	D-4020-6	PULLEY ALIGNMENT SPACER
11	1	D-3991	RETAINING RING
12	1	F-2344	HHCS, 5/8-11 X 1-3/4", GR5
13	4	F-2125	FHCS, 3/8-16 X 1-1/4", YZ, GR5
14	1	F-2143	FHCS, 1/2-13 X 1", YZ, GR5
15	4	F-2151	NUT, 3/8-16 NYLOC, FLANGED, YZ

DOUBLE IDLER
DRIVE BELT IDLER

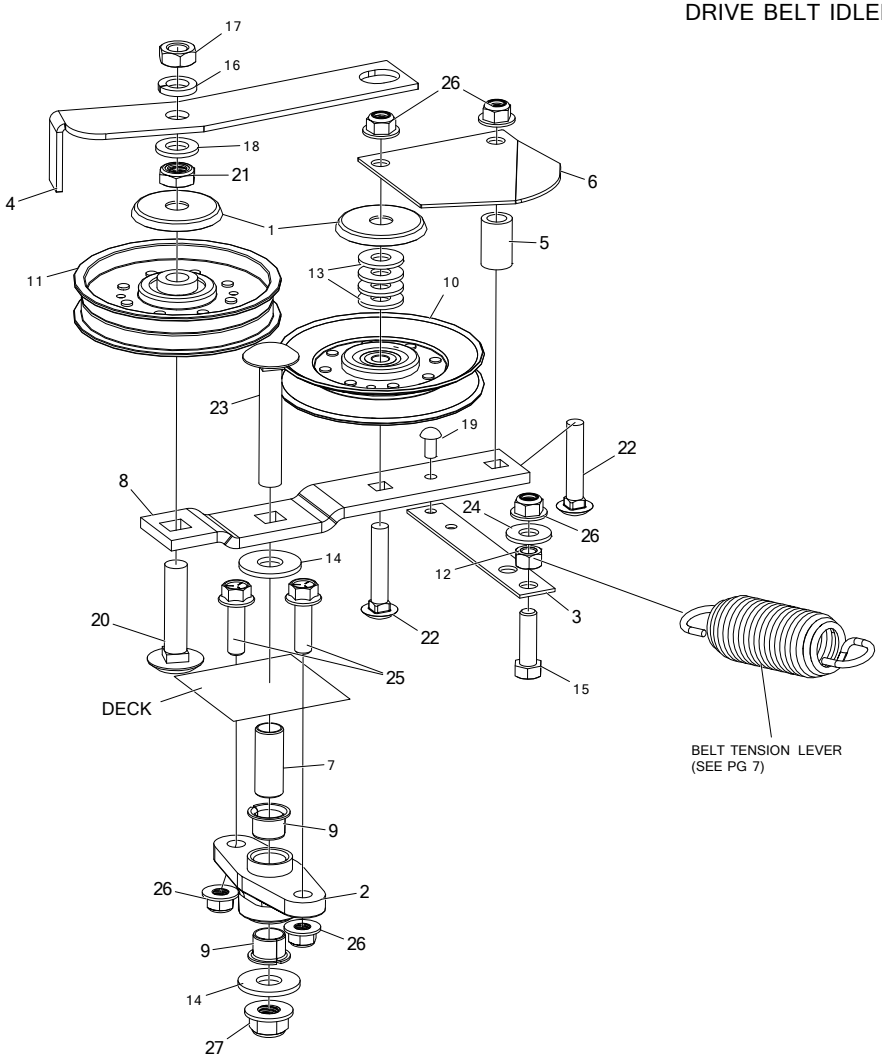

ITEM #	QTY	PART #	DESCRIPTION
1	2	620-201P	WASHER, BEARING CAP
2	1	714-488P	MOUNT, DOUBLE IDLER
3	1	660-081P	EXTENSION, SPRING
4	1	660-107P	BELT KEEPER, A BELT
5	1	668-021P	SPACER, BELT GUARD
6	1	714-183P	BELT GUARD, 54"
7	1	722-031P	MOUNTING PIN
8	1	722-032P	IDLER ARM
9	2	D-3730	BUSHING, DU 5/8 DIA X 1/2 LG
10	1	D-3923	PULLEY, V-IDLER, 4.59OD, AB, NTN
11	1	D-3924	PULLEY, FLAT IDLER, 4.25 OD, NTN, DBL INSERT
12	1	F-1005-03	NUT, 3/8-16, CENTERLOCK, YZ, GR5
13	4	F-1009-03	WASHER, FLAT, 3/8, YZ
14	2	F-1009-05	WASHER, FLAT STD, 1/2" NOMINAL, YZ
15	1	F-1307	HHCS, 3/8-16 X 1-1/4", YZ, GR5
16	1	F-1464	LOCKWASHER, 1/2"
17	1	F-1489	NUT, HEX, JAM, 1/2-13, YZ
18	1	F-1521	WASHER, 1/2" CUSTOM, YZ
19	1	F-1733	DRIVE SCREW, 1/4" X 1/2", RND HD
20	1	F-1822	BOLT, CARRIAGE, 1/2-13 X 2-1/4", YZ, GR5
21	1	F-1966	NUT, THIN, 1/2-13, NYLOC, YZ
22	2	F-1976	BOLT,CARRIAGE, 3/8-16 X 2", YZ, GR5
23	1	F-2047	CARRIAGE BOLT, 1/2-13 X 3" ZINC/YELLOW DICHROMATE FULL THREAD
24	1	F-2083	WASHER, 3/8" FENDER
25	2	F-2125	FHCS, 3/8-16 X 1-1/4", YZ, GR5
26	5	F-2151	NUT, 3/8-16 NYLOC, FLANGED, YZ
27	1	F-2152	NUT, 1/2-13 NYLOC, FLANGED, YZ

BELT TENSION LEVER

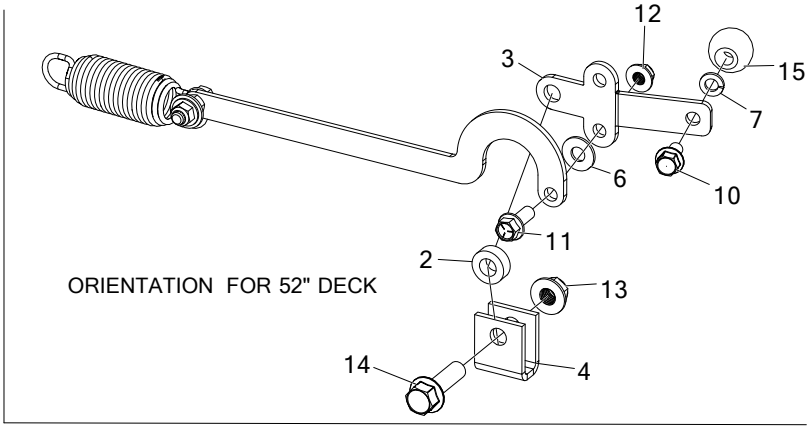

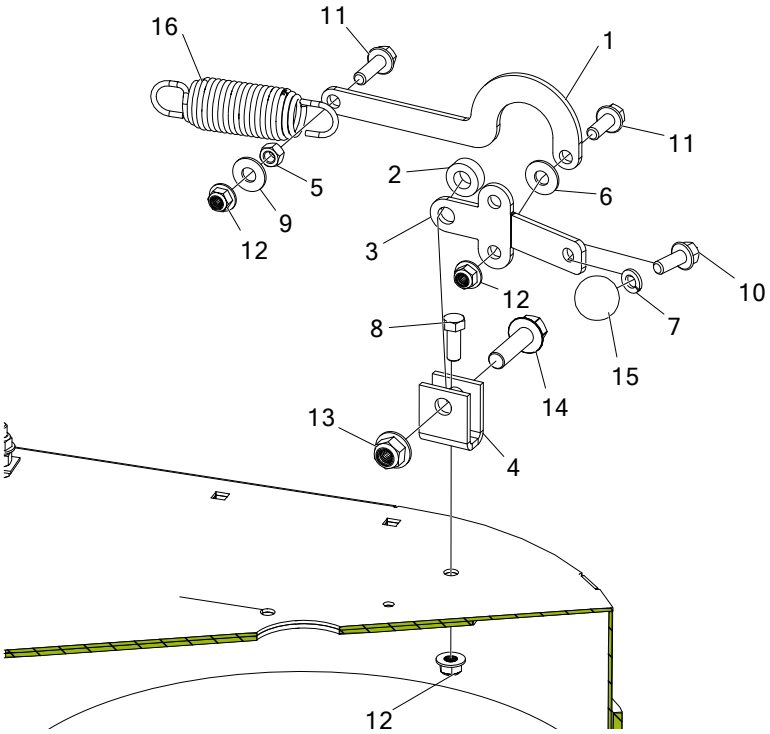

ITEM #	QTY	PART #	DESCRIPTION
1	1	722-040P	BELT TIGHTENER ARM, 52" DECK
-	1	722-044P	BELT TIGHTENER ARM, 60" DECK
-	1	660-031P	BELT TIGHTENER ARM, 48" DECK
2	1	660-038P	SPACER, 3/8" WIDE
3	1	660-184P	HANDLE, BELT TENSIONER
4	1	661-015P	SHACKLE
5	1	F-1005-03	NUT, 3/8-16, CENTERLOCK, YZ, GR5
6	1	F-1009-03	WASHER, FLAT, 3/8, YZ
7	1	F-1019-03	LOCKWASHER, HVY, 3/8, YZ
8	1	F-1394	HHCS,3/8-16NC X 1",GR.5, YELLOW PLATED
9	1	F-2083	WASHER, 3/8" FENDER
10	1	F-2124	FHCS, 3/8-16 X 3/4", YZ, GR5
11	2	F-2141	FHCS, 3/8-16 X 1
12	3	F-2151	NUT, 3/8-16 NYLOC, FLANGED, YZ
13	1	F-2152	NUT, 1/2-13 NYLOC, FLANGED, YZ
14	1	F-2154	FHCS, 1/2-13 x 1-3/4", YZ, GR5
15	1	H-2405	BALL, 1-1/4"
16	1	H-2619	SPRING, 5 X 1-1/2, TAPERED ENDS

FIXED IDLER ASSEMBLIES

6" PULLEY

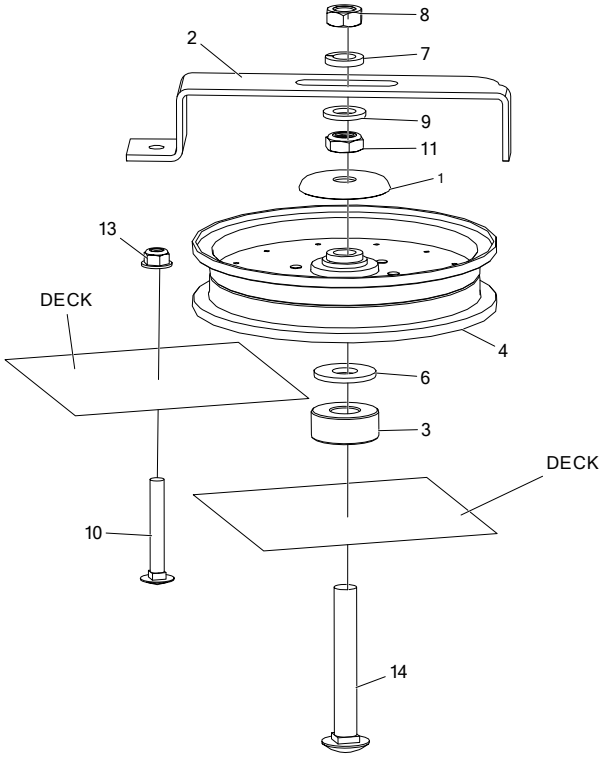

5" PULLEY

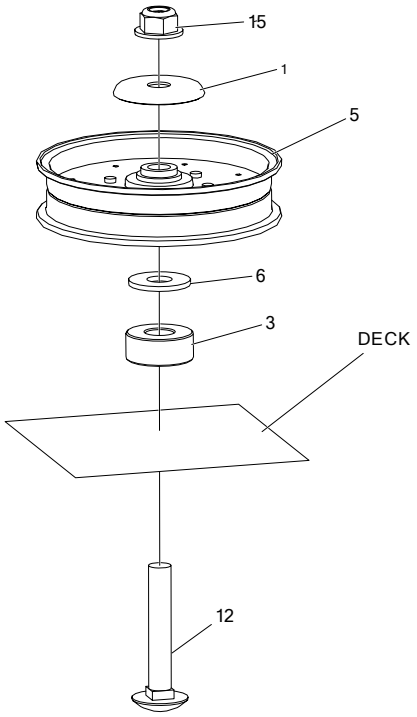

ITEM #	QTY	PART #	DESCRIPTION
1	2	620-201P	WASHER, BEARING CAP
2	1	660-112P	BELT KEEPER, 48 AND 52" DECK
-	1	660-114P	BELT KEEPER, 60" DECK
3	2	660-206P	SPINDLE SPACER
4	1	D-3903	PULLEY, FLAT IDLER, 6" (NTN)
5	1	D-3904	PULLEY, FLAT IDLER, 5"
6	2	F-1009-05	WASHER, FLAT STD, 1/2" NOMINAL, YZ
7	1	F-1464	LOCKWASHER, 1/2"
8	1	F-1489	NUT, HEX, JAM, 1/2-13, YZ
9	1	F-1521	WASHER, 1/2" CUSTOM, YZ
10	1	F-1707	CARRIAGE BOLT, 5/16-18 X 2-1/4 ZINC PLATED
11	1	F-1966	NUT, THIN, 1/2-13, NYLOC, YZ
12	1	F-2047	CARRIAGE BOLT, 1/2-13 X 3" ZINC/YELLOW DICHROMATE FULL THREAD
13	1	F-2063	NUT, 5/16-18, NYLOC, FLANGED, YZ
14	1	F-2106	BOLT, CARRIAGE, 1/2-13 X 3-1/2", YZ, GR5
15	1	F-2152	NUT, 1/2-13 NYLOC, FLANGED, YZ

DECK LIFT ASSEMBLY & RELATED PARTS

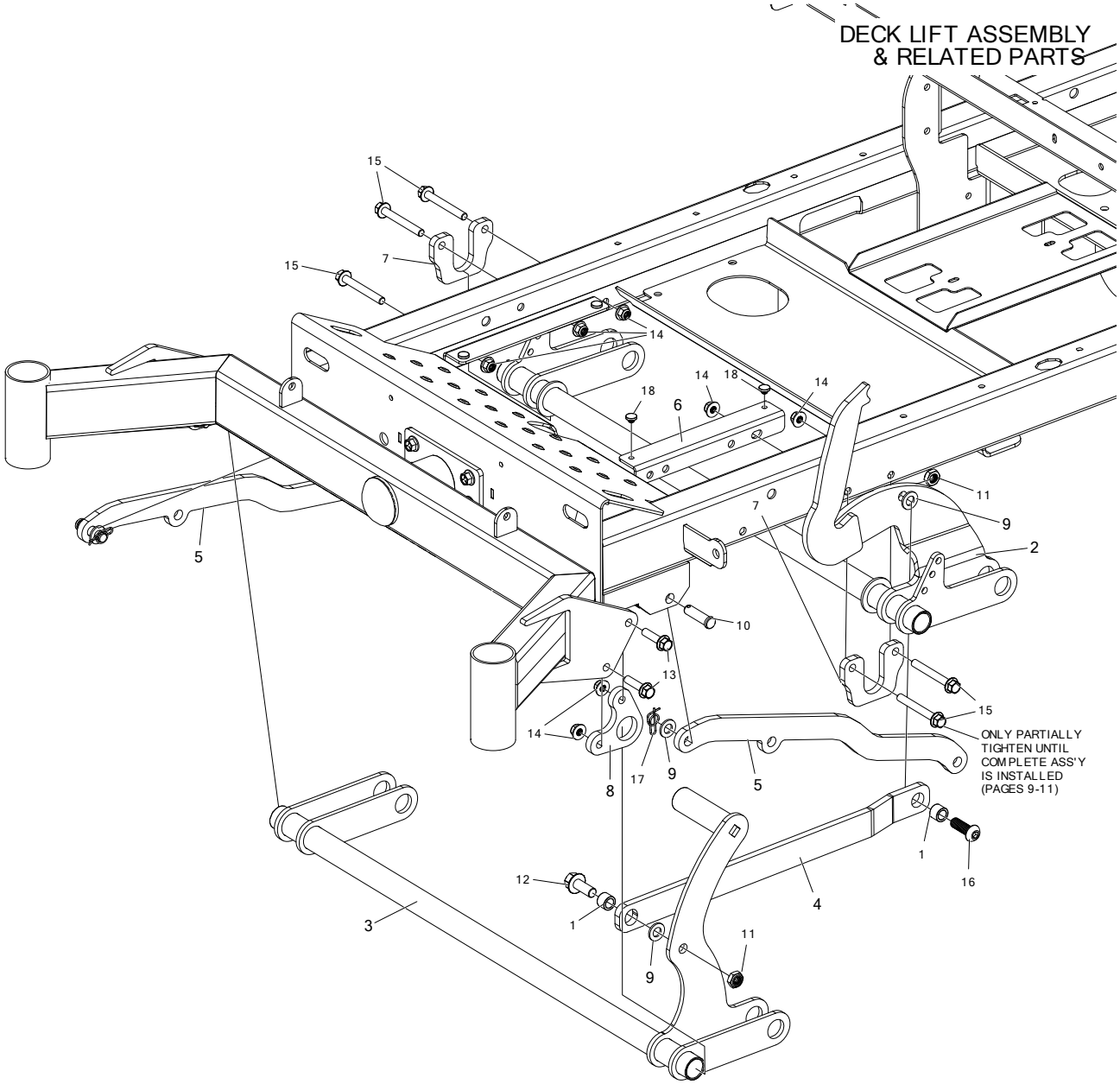

ITEM #	QTY	PART #	DESCRIPTION
1	2	720-010P	CLAMP EXTENSION
2	1	720-079W	WLDT, DECK LIFT, REAR
3	1	720-133W	WLDT, DECK LIFT, FRONT
4	1	720-090P	DECK LIFT LINK
5	2	720-093P	DRAG BAR
6	2	720-094P	FLOOR PAN SUPPORT
7	2	724-032P	DECK PIVOT MOUNT PLATE
8	2	724-033P	DECK SUSPENSION FRONT PLATE
9	4	F-1521	WASHER, 1/2" CUSTOM, YZ
10	2	F-1896	CLEVIS PIN, 1/2 X 1-3/4", YZ
11	2	F-1966	NUT, THIN, 1/2-13, NYLOC, YZ
12	1	F-2127	FHCS, 1/2-13 X 1-1/4", YZ, GR5
13	4	F-2147	FHCS, 3/8-16 X 1-1/2", YZ, GR5
14	9	F-2151	NUT, 3/8-16 NYLOC, FLANGED, YZ
15	5	F-2180	FHCS, 3/8-16 x 3", YZ, GR5
16	1	F-2278	BUTTON SHCS, 1/2-13 X 1-1/2, YZ
17	2	H-2239	1/2" RUE RING
18	4	H-2461	RUBBER BUMPER

DECK LIFT ASSEMBLY & RELATED PARTS (CON'T)

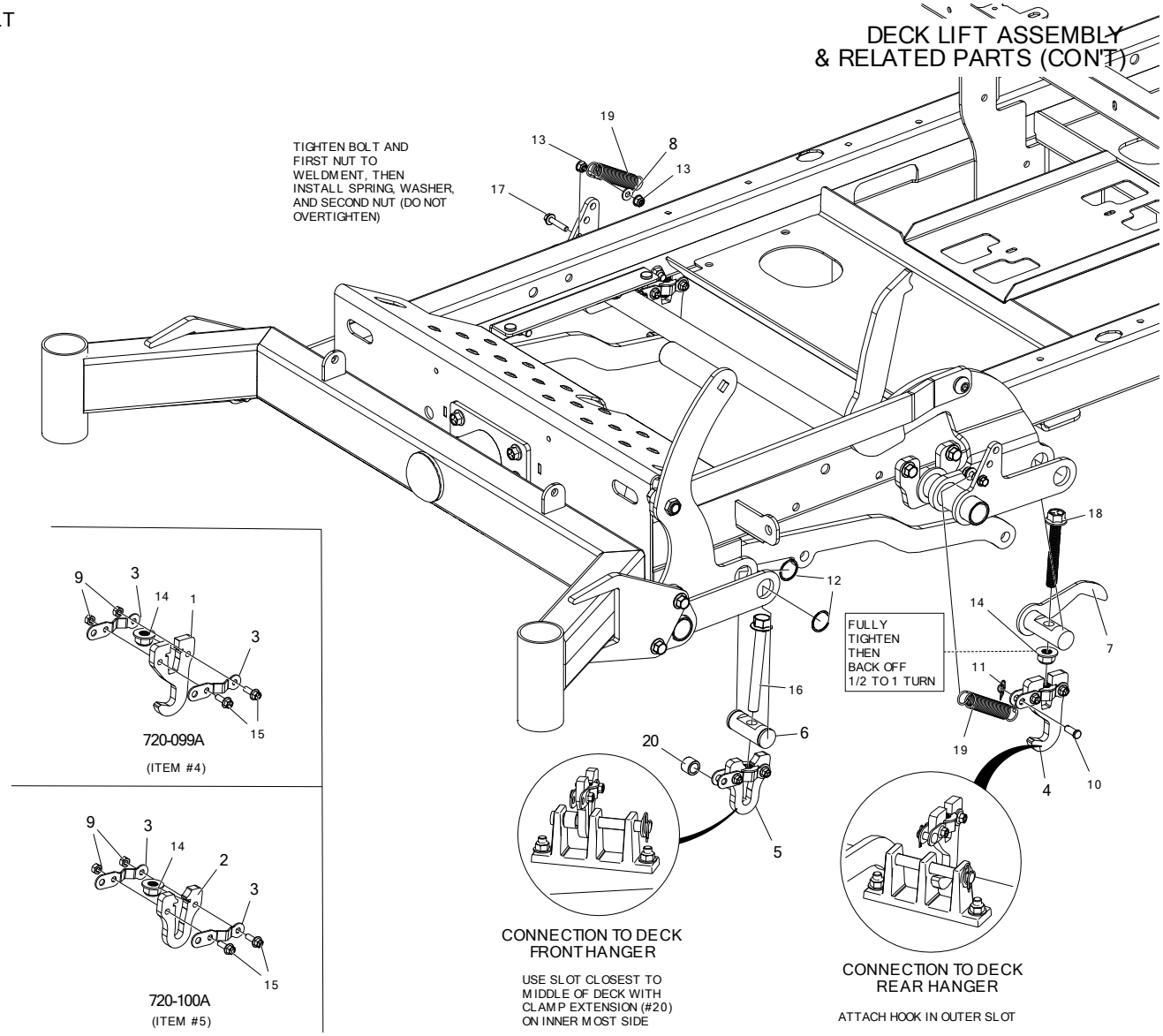

ITEM #	QTY	PART #	DESCRIPTION
1	2	720-096P	DECK HANGER, REAR
2	2	720-097P	DECK HANGER, FRONT
3	8	720-098P	NUT RETAINER
4	2	720-099A	ASS'Y, DECK HANGER, REAR
5	2	720-100A	ASS'Y, DECK HANGER, FRONT
6	2	724-052P	HANGER PIN, FRONT
7	1	724-091W	HANGER PIN WLDT, REAR LH
-	1	724-092W	HANGER PIN WLDT, REAR RH
8	2	F-2097	WASHER, FENDER, 1/4" X 7/8"
9	8	F-1158	NUT, CENTERLOCK, 1/4-20, YZ, GR5
10	2	F-1443	CLEVIS PIN, 5/16 X 7/8"
11	2	F-1492	RUE RING, 5/16
12	4	F-1998	SPIROL RING 1"
13	4	F-2132	NUT, 1/4-20 NYLOC, FLANGED, YZ
14	6	F-2152	NUT, 1/2-13 NYLOC, FLANGED, YZ
15	8	F-2162	FHCS, 1/4-20 X 3/4", YZ, GR5
16	2	F-2181	FHCS, 1/2-13 X 4.50, YZ, GR8
17	2	F-2182	FHCS, 1/4-20 X 1-1/4", YZ, GR5
18	2	F-2277	FHCS 1/2-13 X 3-1/2, GR5, YZ, FULL THREAD
19	2	H-1635	SPRING, EXT, 3/4" OD X 4" OAL
20	2	720-010P	CLAMP EXTENSION

CUT HEIGHT ASSEMBLY & RELATED PARTS

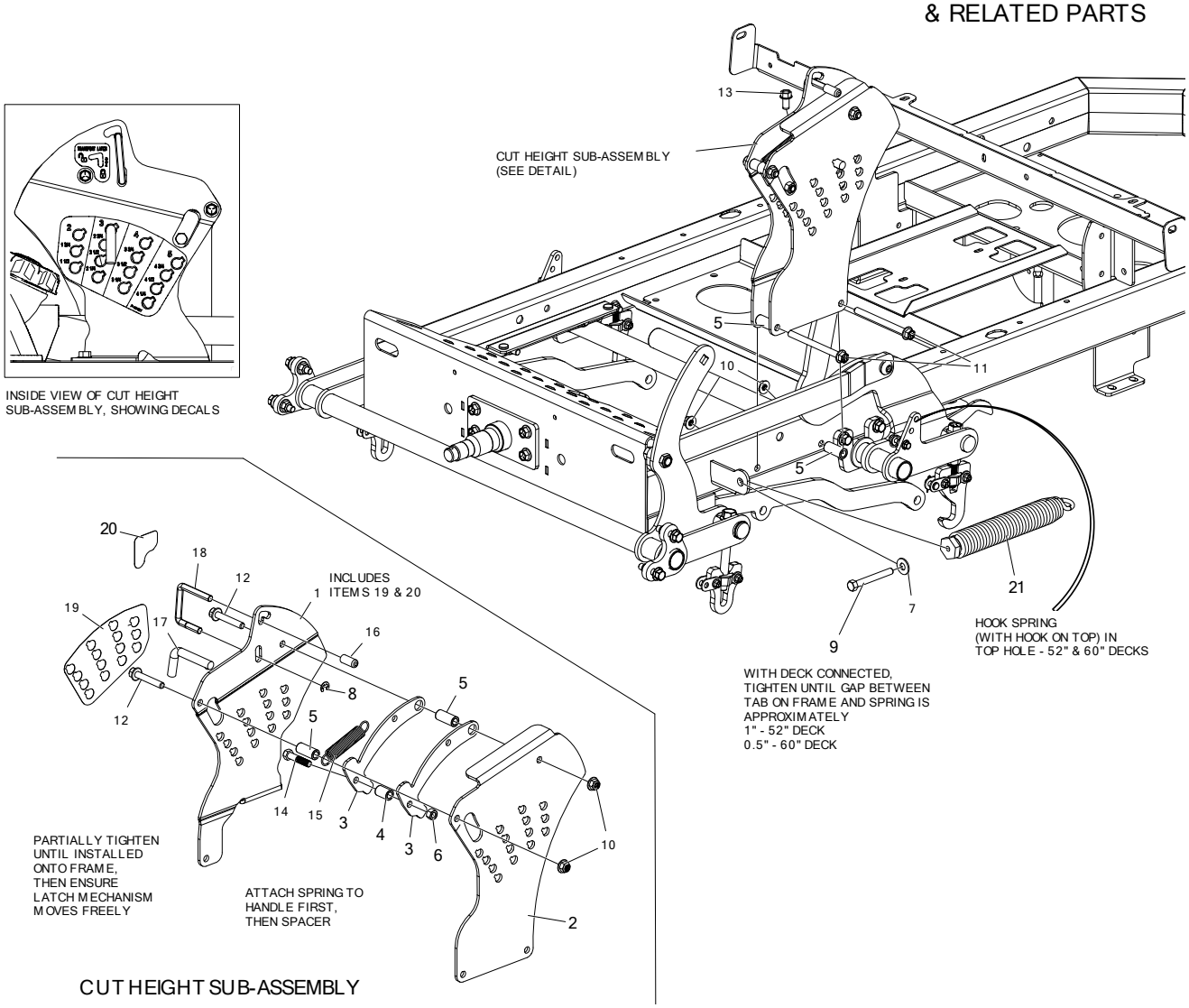

ITEM #	QTY	PART #	DESCRIPTION
1	1	720-134A	PLATE, CUT HEIGHT - INNER W/ DECALS
2	1	720-105P	PLATE, CUT HEIGHT - OUTER
3	2	724-042P	CATCH PLATE
4	1	724-079P	SPACER, CATCH PLATE
5	4	724-080P	SPACER, CUT HEIGHT PLATE
6	1	F-1005-03	NUT, 3/8-16, CENTERLOCK, YZ, GR5
7	1	F-1009-03	WASHER, FLAT, 3/8, YZ
8	1	F-1080	SNAP RING TRUARC #5144-37 3/8 HEAVY E-RING
9	1	F-1329	SCREW,3/8-16 X 3 GR5 FULL THREADED, PLATED
10	4	F-2151	NUT, 3/8-16 NYLOC, FLANGED, YZ
11	2	F-2160	FHCS, 3/8-16 X 4-1/2", YZ, GR5
12	2	F-2218	FHCS, 3/8-16 X 2-1/4", YZ, GR5
13	1	F-2219	HFCS, 3/8-16 X 3/4", CZ, THD FORMING
14	1	F-2260	HHCS, 3/8-16 X 1-3/4, YZ, GR8
15	1	H-1635	SPRING, EXT, 3/4" OD X 4" OAL
16	1	H-2327	3/8 DIA X 1"LONG END CAP
17	1	H-3013	DECK HEIGHT PIN
18	1	H-3120	TRANSPORT LATCH RELEASE HANDLE
19	1	P-13421	DECAL, CUT HEIGHT
20	1	P-13437	DECAL, TRANSPORT LATCH
21	1	H-3117	EXTENSION SPRING, 1.585 O.D. x (9.8) LONG, W/THREADED PLUG

PIVOTING FRONT AXLE & FLOOR PAN

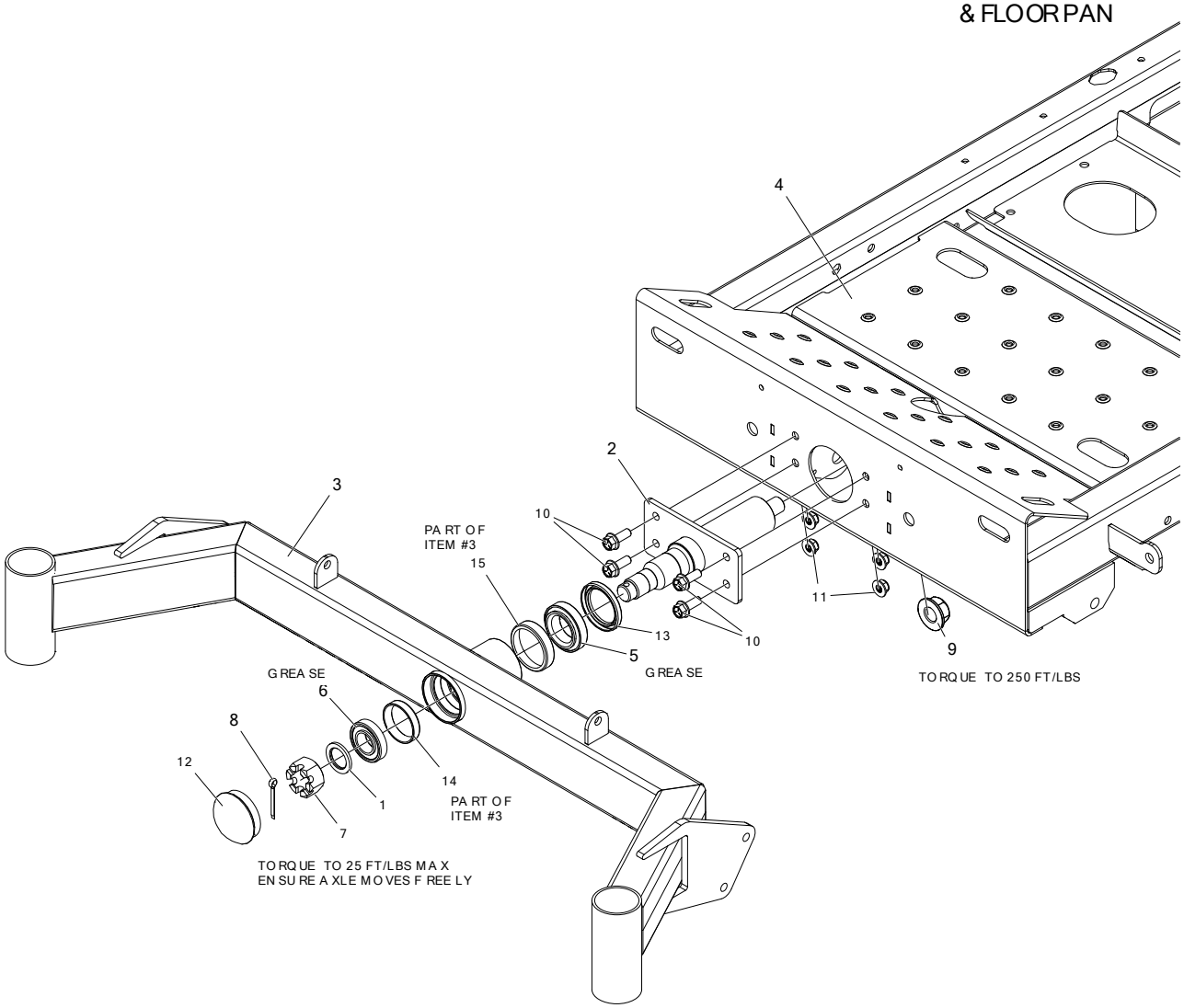

ITEM #	QTY	PART #	DESCRIPTION
1	1	606-303P	WASHER, 10GA GALVANIZED
2	1	724-056W	WLDT, PIVOT SHAFT
3	1	720-160W	WLDT, FRONT AXLE, RED
4	1	720-095P	FLOOR PAN
5	1	D-3825-01	TRB, BEARING CONE
6	1	D-2018-01	BEARING CONE
7	1	F-1724	NUT, HEX, SLOTTED, 1-14, YZ
8	1	F-1728	COTTER PIN, 3/16 X 2", YZ
9	1	F-2078	NUT, 3/4-16, TOP LOCK, GR-GT, YZ
10	4	F-2141	FHCS, 3/8-16 X 1", YZ, GR5
11	4	F-2151	NUT, 3/8-16 NYLOC, FLANGED, YZ
12	1	H-1924	GREASE CAP PLATED
13	1	H-2812	SEAL, SHAFT, 1.75, 2.38, 0.313
14	1	D-2019-01	BEARING CUP
15	1	D-3825-02	BEARING CUP

TIRES & FRONT STEP

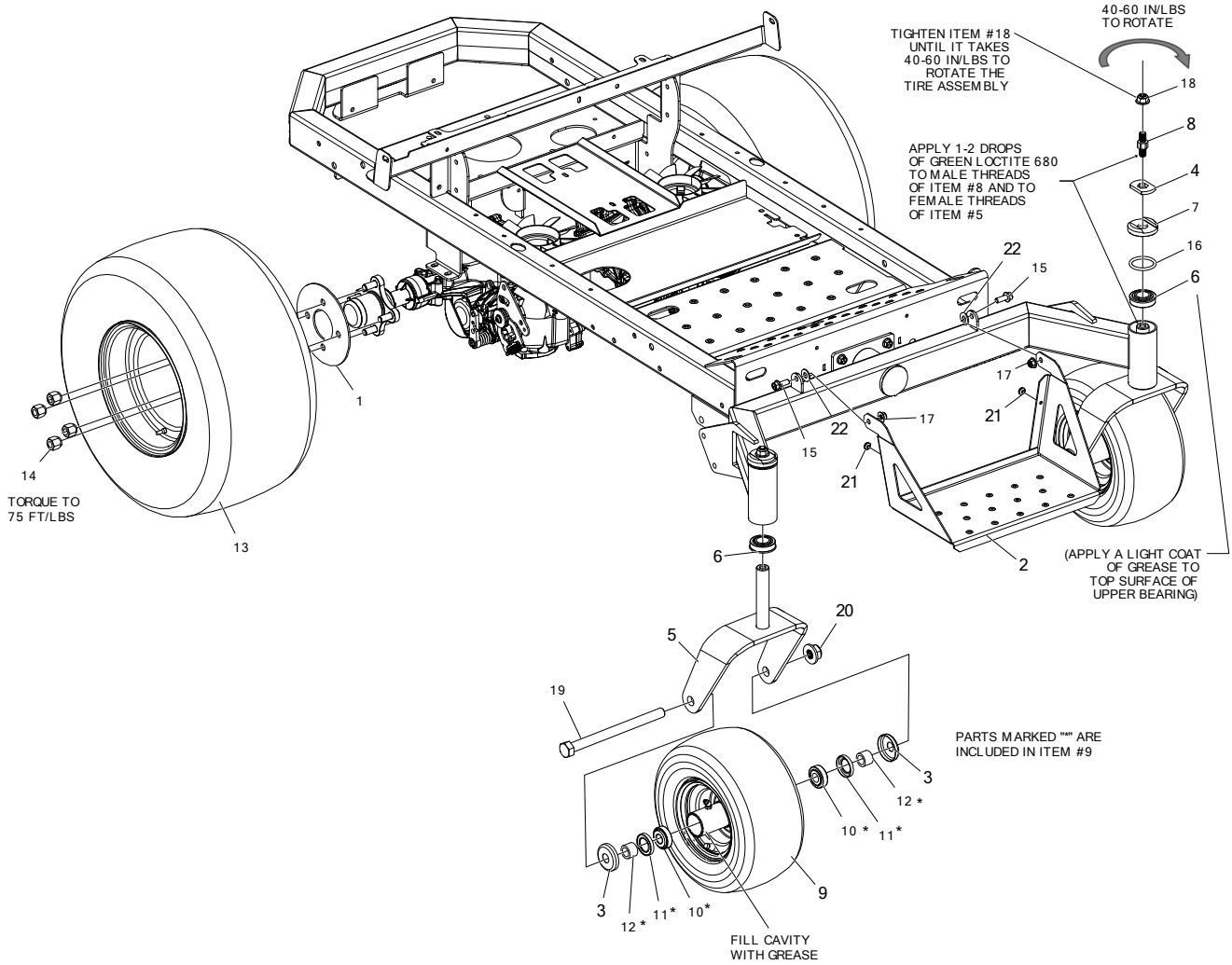

ITEM #	QTY	PART #	DESCRIPTION
1	2	659-092P	WHEEL BACKING PLATE
2	1	663-134P	STEP, EXTENDED
3	4	663-221P	CAP, WHEEL BEARING
4	2	714-589P	CASTER BRAKE DRIVE WASHER
5	2	721-022W	WLDT, CASTER YOKE
6	4	D-2008-02	BEARING, SPD, SF-16-32
7	2	H-3267	CASTER BRAKE CAP
8	2	H-3268	CASTER BRAKE, ADJUSTER STUD
9	5	D-4021	TIRE ASS'Y, FLAT BLACK, SMOOTH, 13 X 6.5-6
10	2	D-4021-4	TAPER ROLLER BEARING, LM11949/11910
11	2	D-4021-5	GREASE SEAL, S17828001
12	2	D-4021-6	SPACER, SPCR005
13	2	D-4033	TIRE ASS'Y, 22 X 11-10, TURF, BLACK, (52” & 60” DECKS)
-	2	D-4034	TIRE ASS'Y, 22 X 9.5-10, BLACK, (48” DECK ONLY)
14	8	F-1499	LUG NUT, 1/2-20, YZ
15	2	F-2141	FHCS, 3/8-16 X 1", YZ, GR5
16	2	D-4217	CASTER BRAKE, O-RING
17	2	F-2151	NUT, 3/8-16 NYLOC, FLANGED, YZ
18	2	F-2152	NUT, 1/2-13 NYLOC, FLANGED
19	2	F-2194	HHCS, 3/4-10 X 9-1/2”, YZ, GR5
20	2	F-2195	NUT, FLANGE NYLOC, YZ
21	2	H-2461	RUBBER BUMPER
22	2	F-1009-03	WASHER, FLAT, 3/8”, YZ

FRONT PANEL & RELATED PARTS

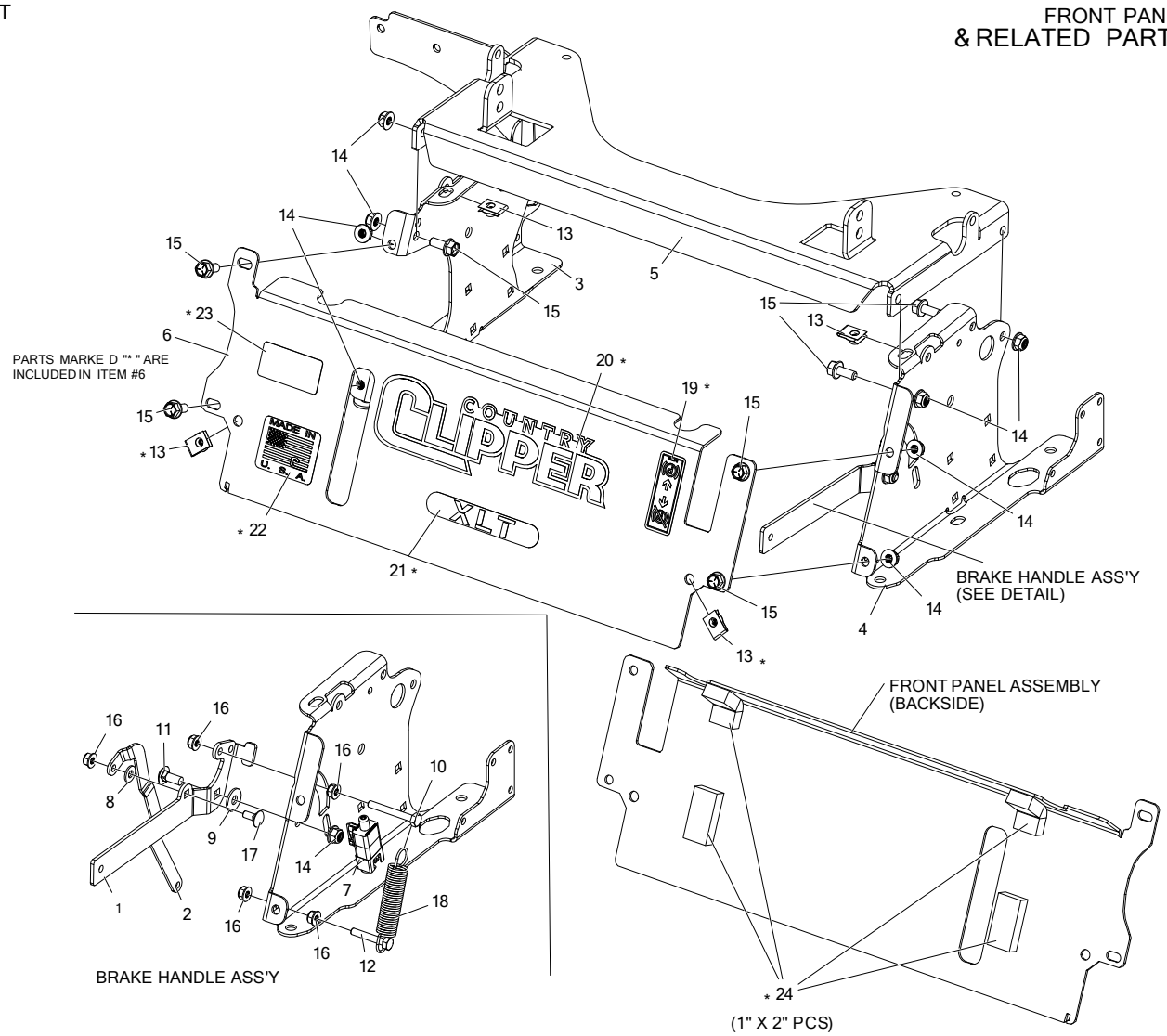

ITEM #	QTY	PART #	DESCRIPTION
1	1	714-503P	BRAKE HANDLE, OFFSET
2	1	714-512P	BRAKE LINK
3	1	714-532P	SIDE PANEL, RH
4	1	714-538P	SIDE PANEL, LH
5	1	714-536P	SEAT MOUNT, HINGED
6	1	720-164A	FRONT PANEL W/DECALS, (XLT)
7	1	E-6872	PLUNGER SWITCH, RAIL MOUNT (NO/NO)
8	1	F-1009-01	FLAT WASHER, 1/4", YZ
9	1	F-1009-02	WASHER, FLAT, 5/16
10	1	F-1015-09	HHCS, 1/4-20 X 2", YZ, GR5
11	1	F-1671	CARRIAGE BOLT,5/16-18 X 3/4", YZ, GR5
12	1	F-1716	CAPSCREW, 1/4-20 X 1-1/2, GR5, YZ

ITEM #	QTY	PART #	DESCRIPTION
13	4	F-1858	U-NUT, 1/4-20
14	9	F-2063	NUT, 5/16-18, NYLOC, FLANGED, YZ
15	8	F-2120	FHCS, 5/16-18 X 3/4", YZ, GR5
16	5	F-2132	NUT, 1/4-20 NYLOC, FLANGED, YZ
17	1	F-2155	BOLT, CARRIAGE, 1/4-20 X 5/8", YZ, GR5
18	1	H-1635	SPRING, EXT, 3/4" OD X 4" OAL
19	1	P-11382	DECAL, PARK BRAKE
20	1	P-13312	DECAL, LOGO, CHROME w/BLK, LG
21	1	P-13365	DECAL, XLT
22	1	P-13000	DECAL, MADE IN USA
23	1	P-13748	DECAL, FUEL SAFETY
24	4	H-2990	NEOPRENE FOAM (ADHESIVE) 1/2"

FRONT PANEL ASS'Y & RELATED PARTS (CON'T)

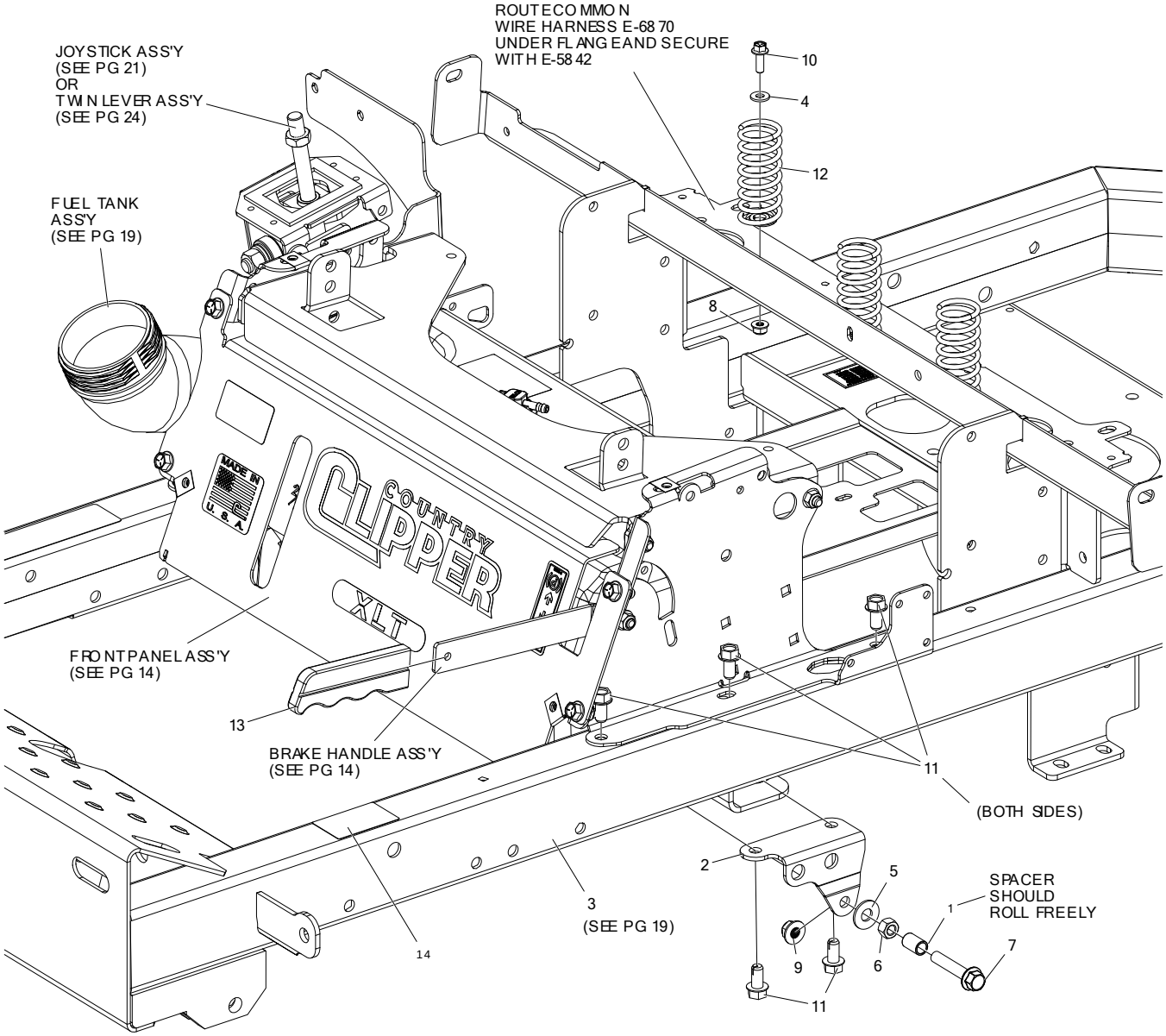

ITEM #	QTY	PART #	DESCRIPTION
1	2	707-073P	STAND-OFF, LINKAGE MOUNT
2	1	714-473P	BRACKET, DECK FLIP & BRAKE, ROD HANGER, LH
-	1	714-501P	BRACKET, DECK FLIP & BRAKE, ROD HANGER, RH
3	1	720-162A	WLDT, FRAME, W/ DECALS
4	3	F-1009-01	FLAT WASHER, 1/4", YZ
5	2	F-1009-03	WASHER, FLAT, 3/8, YZ
6	2	F-1011-03	NUT, HEX, 3/8-16, YZ
7	2	F-2126	FHCS, 3/8-16 X 2”, YZ, GR5
8	3	F-2132	NUT, 1/4-20 NYLOC, FLANGED, YZ
9	2	F-2151	NUT, 3/8-16, NYLOC, FLANGED
10	3	F-2162	FHCS, 1/4-20 X 3/4", YZ, GR5
11	10	F-2219	HFCS, 3/8-16 X 3/4", CZ, THD FORMING
12	3	H-1920	SPRING, SEAT
13	1	H-1926	1/4" X 1" HANDLE GRIP
14	1	P-13830	DECAL, QR CODE, STAND-UP DECK

BATTERY & SOLENOID

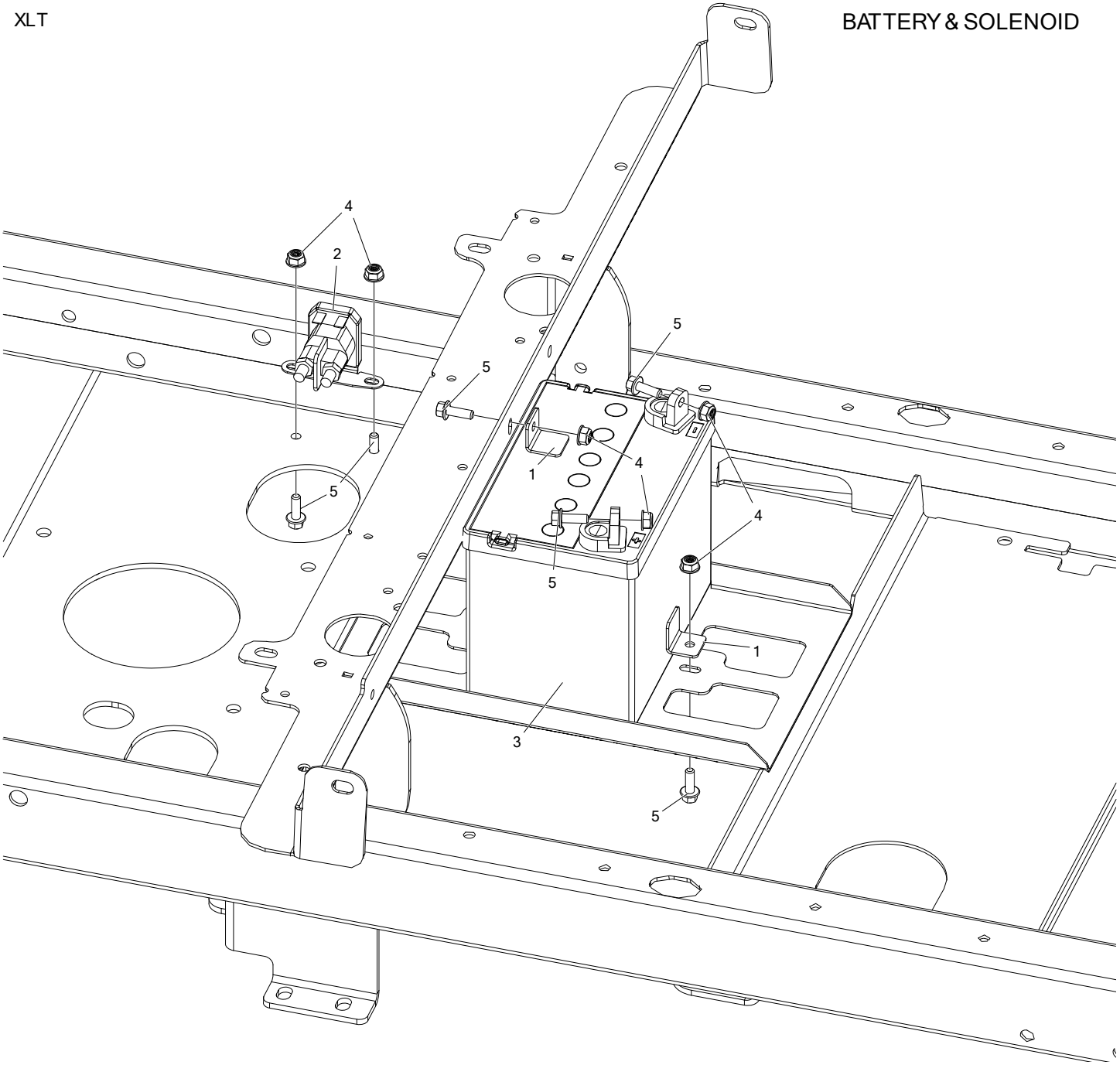

ITEM #	QTY	PART #	DESCRIPTION
1	2	714-513P	BATTERY CLIP
2	1	E-6612	SOLENOID 12V STARTER, 4 TERM.
3	1	E-6659	BATTERY, YPS 35
4	6	F-2132	NUT, 1/4-20 NYLOC, FLANGED, YZ
5	6	F-2162	FHCS, 1/4-20 X 3/4", YZ, GR5

BRAKE ASSEMBLY

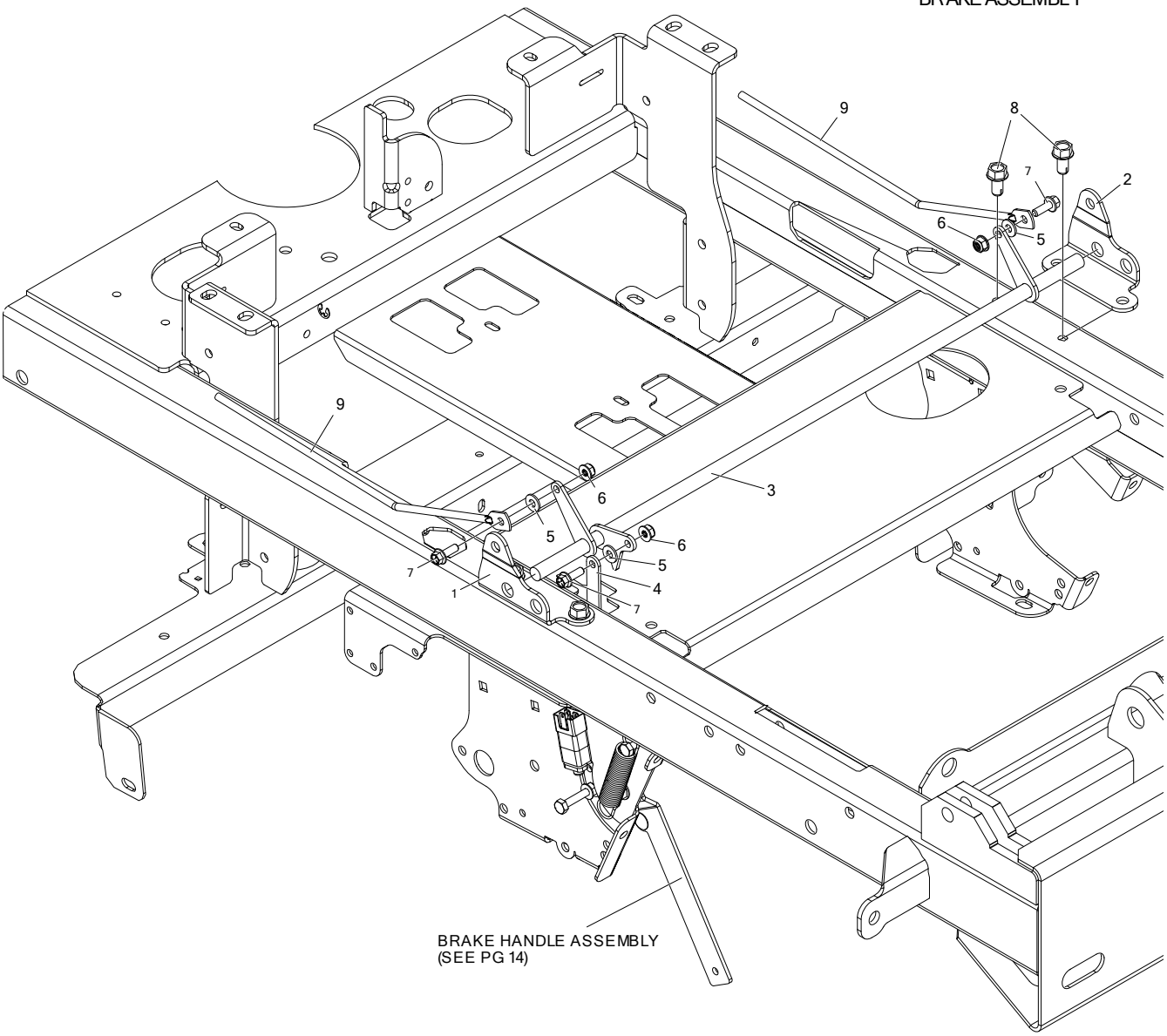

ITEM #	QTY	PART #	DESCRIPTION
1	1	714-473P	BRACKET, DECK FLIP & BRAKE ROD HANGER, LH
2	1	714-501P	BRACKET, DECK FLIP & BRAKE ROD HANGER, RH
3	1	714-511W	WLDT, BRAKE ROD
4	1	714-512P	BRAKE LINK
5	3	F-1009-01	FLAT WASHER, 1/4", YZ
6	3	F-2132	NUT, 1/4-20 NYLOC, FLANGED, YZ
7	3	F-2162	FHCS, 1/4-20 X 3/4", YZ, GR5
8	4	F-2219	HFCS, 3/8-16 X 3/4", CZ, THD FORMING
9	2	H-3250	BRAKE LINK ROD

BRAKE ASSEMBLY (CON'T)

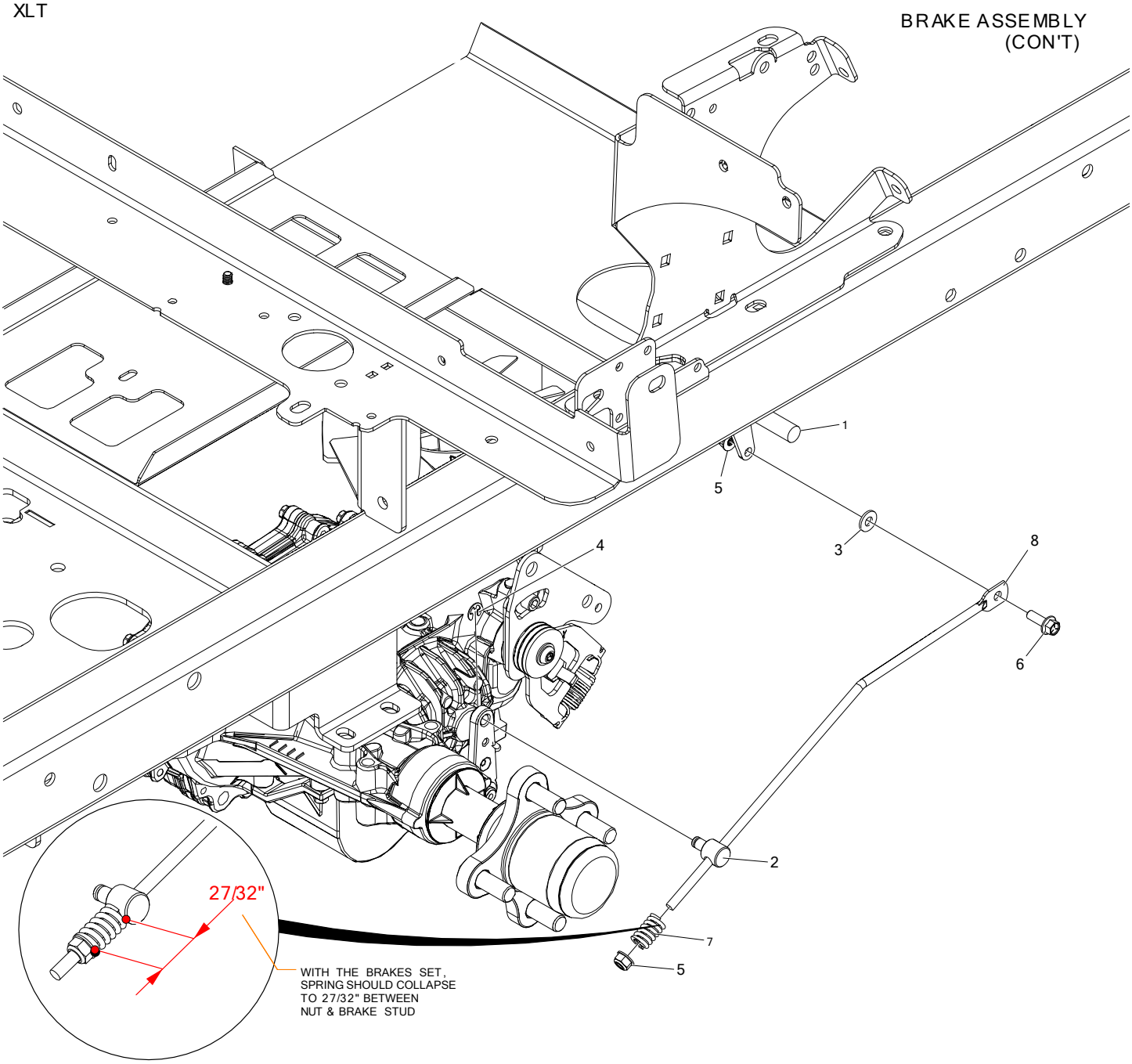

ITEM #	QTY	PART #	DESCRIPTION
1	1	714-511W	WLDT, BRAKE ROD
2	2	714-522P	BRAKE STUD
3	2	F-1009-01	FLAT WASHER, 1/4", YZ
4	2	F-1610	RETAINING RING, EXTERNAL
5	2	F-2132	NUT, 1/4-20 NYLOC, FLANGED, YZ
6	2	F-2162	FHCS, 1/4-20 X 3/4", YZ, GR5
7	2	H-2786	SPRING, COMP, 0.562 X 0.88 HGT
8	2	H-3250	BRAKE LINK ROD

FUEL TANK ASSEMBLY

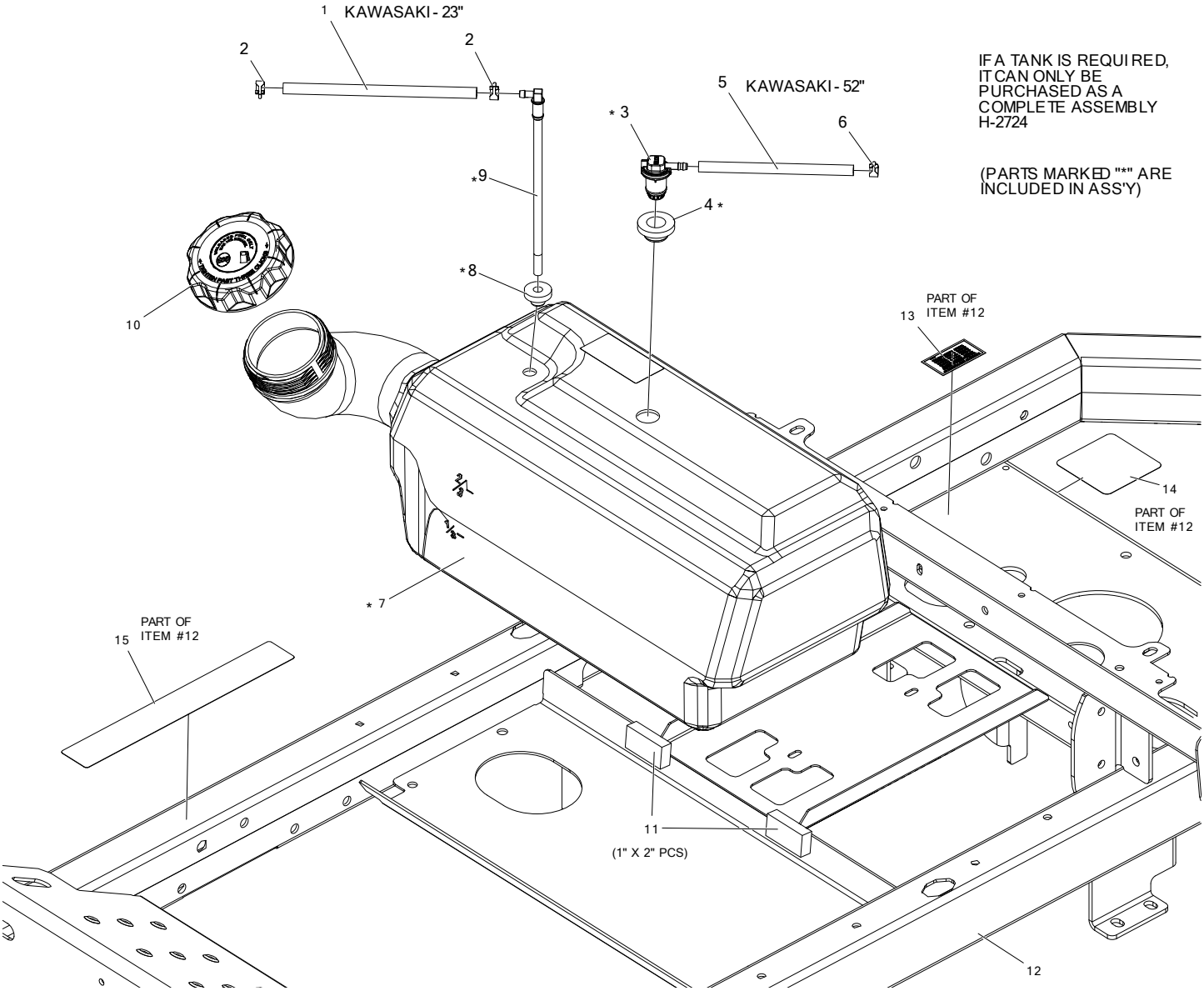

ITEM #	QTY	PART #	DESCRIPTION
1	1	H-1648	FUEL LINE, 1/2" O.D., 1/4" I.D.
2	2	H-1687	1/2 O.D. HOSE SPRING CLAMP
3	1	H-2831	REMOTE VENT
4	1	H-2679	REMOTE VENT GROMMET
5	1	H-2697	HOSE, FUEL LINE .188 ID X .406 OD
6	1	H-2698	CLAMP, .406 OD FUEL LINE
7	1	H-2724	ASSEMBLY, FUEL TANK, SMALL
8	1	H-2741	GROMMET, PICK UP TUBE
9	1	H-2742	PICK UP TUBE
10	1	H-3236	RATCHET CAP, W/ SS TETHER, 3.5 DIA
11	2	H-2990	WEATHER-RESISTANT NEOPRENE FOAM (ADHESIVE) 1/2"
12	1	720-162A	WLDT, FRAME W/ DECALS
13	1	P-10777	PATENT DECAL
14	1	P-12918	DECAL, HYDRO BELT ROUTING
15	1	P-13751	DECAL, SAFETY

JOYSTICK CONTROL & RELATED PARTS

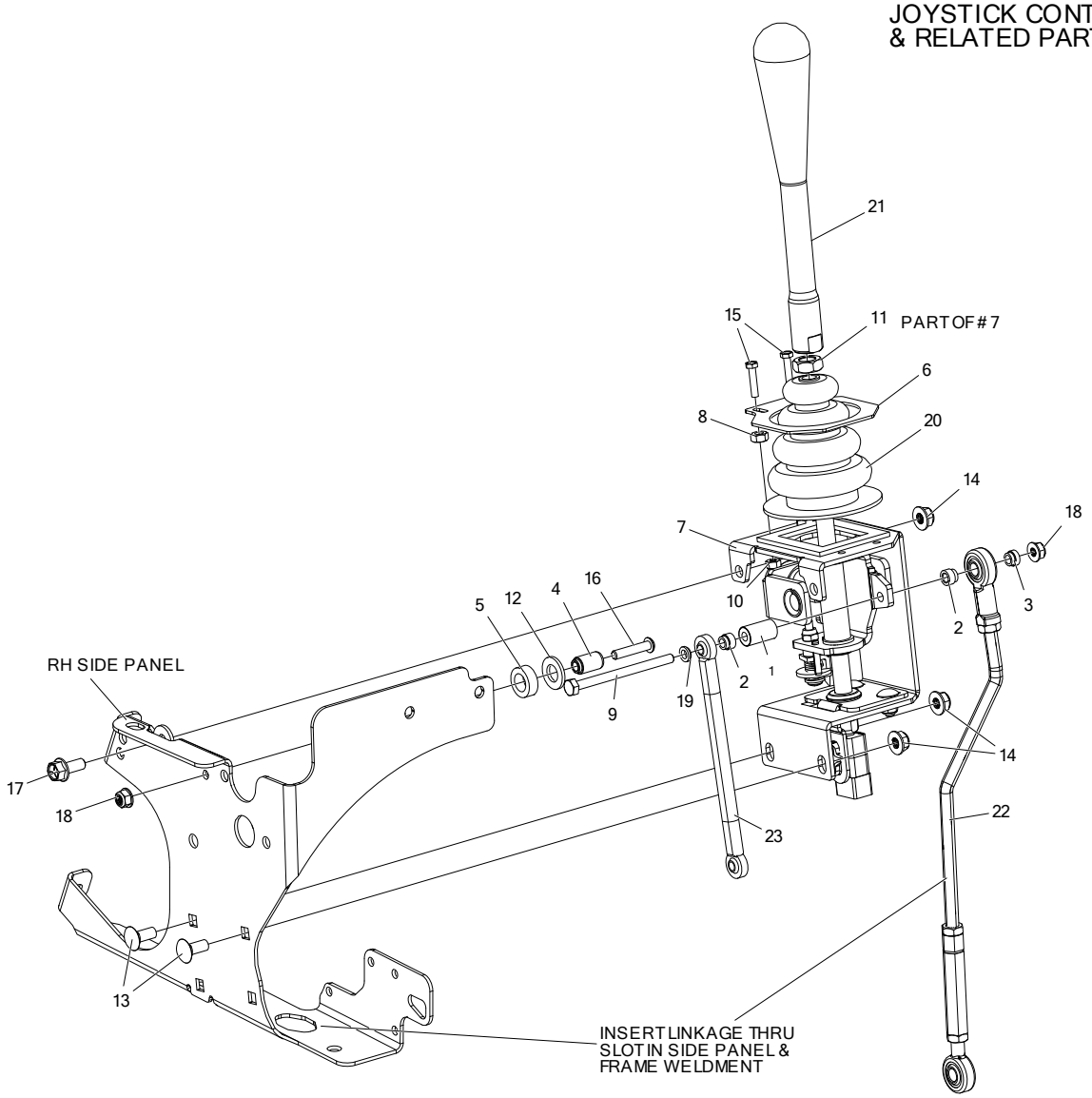

ITEM #	QTY	PART #	DESCRIPTION
1	1	625-100P	TUBE, PIVOT, JOYSTICK
2	2	625-107P	BUSHING, .375 ROD END
3	1	625-116P	BUSHING, .375 ROD END, SHORT
4	1	714-544P	PIVOT PIN
5	1	625-126P	SPACER, JOYSTICK PANEL
6	1	720-038P	PLT, BOOT RETAINER
7	1	720-161A	JOYSTICK ASSEMBLY (AMBIDEXTROUS)
8	2	F-1011-01	NUT,HEX, 1/4-20 UNC-2B YELLOW PLATED
9	1	F-1020-01	CAPSCREW, 1/4-20 X 3-1/2", YZ, GR5
10	2	F-1448	LOCKNUT, 10-32 NYLOC YELLOW PLTD
11	1	F-1462	JAM NUT, 1/2-20, RH, YZ
12	1	F-1521	WASHER, 1/2" CUSTOM, YZ
13	2	F-1671	CARRIAGE BOLT, 5/16-18 X 3/4 GR5, YZ
14	3	F-2063	NUT, 5/16-18, NYLOC, FLANGED, YZ
15	2	F-2100	HHMS, 10-32 X 7/8", CZ
16	1	F-2103	SHCS, BUTTON HD, 1/4-20 X 1", CZ
17	1	F-2120	FHCS, 5/16-18 X 3/4", YZ, GR5
18	2	F-2132	NUT, 1/4-20 NYLOC, FLANGED, YZ
19	1	H-1989	BALL JOINT BUSHING
20	1	H-1991	JOY STICK BOOT
21	1	H-2964	HANDLE, JOYSTICK
22	1	H-3226	LINKAGE ASSEMBLY, JS & TS, RH
23	1	H-3229	LINKAGE, INNER, 1/4 X 6.375

JOYSTICK ASSEMBLY
{720-161A}

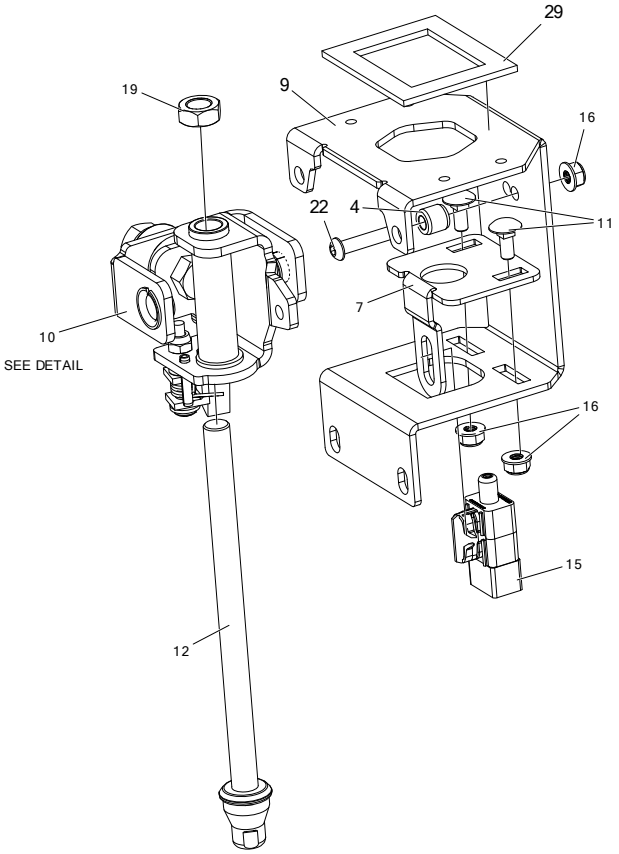

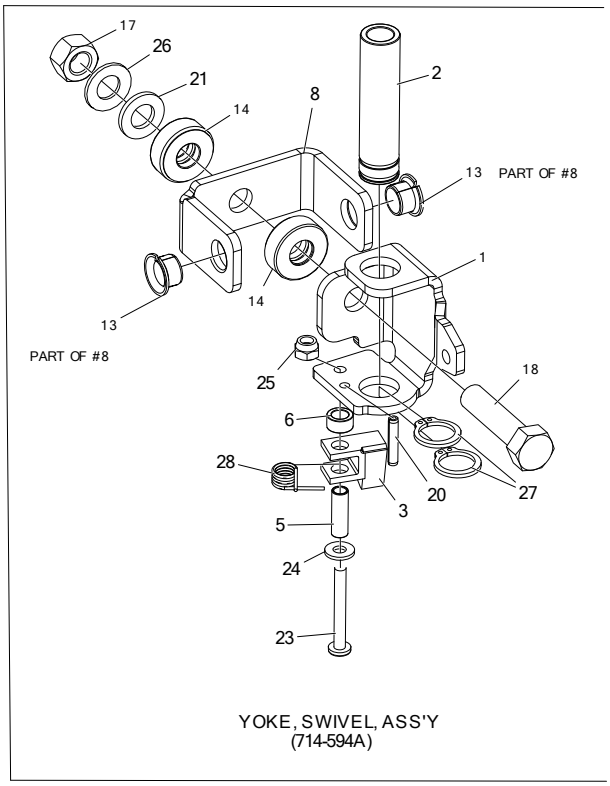

ITEM #	QTY	PART #	DESCRIPTION
1	1	625-096P	YOKE, SWIVEL, JOYSTICK
2	1	625-099P	TUBE, GUIDE, CONTROL ROD
3	1	714-593P	TAB, CAM DETENT
4	1	625-106P	PIN, PIVOT, JS
5	1	625-124P	TUBE-SPACER, DETENT CAM
6	1	625-125P	SPACER, CAM DETENT
7	1	724-114P	JOYSTICK NEUTRAL PLATE
8	1	625-128A	JOYSTICK ASSEMBLY
9	1	724-113P	JOYSTICK HOUSING
10	1	714-594A	YOKE, SWIVEL ASSEMBLY
11	2	F-2155	BOLT, CARRIAGE, 1/4-20 X 5/8”, YZ, GR5
12	1	709-169A	ROD ASSEMBLY, SHORT, 1/2"
13	2	D-3784	BUSHING, DU 1/2 DIA X 3/8 WIDE
14	2	D-3931	THRUST BEARING
15	1	E-6692	PLUNGER SWITCH, RAIL MOUNT
16	3	F-2132	NUT, FLANGED, 1/4-20 w/NYLOC, YZ
17	1	F-1005-05	NUT, 1/2-13, CENTERLOCK, YZ, GR5
18	1	F-1293	HHCS, 1/2-13 X 2", YZ, GR5
19	1	F-1462	JAM NUT, 1/2-20, RH, YZ
20	1	F-1503	PIN,SPIROL 3/16 DIA X 1 X .010 THK
21	1	F-1521	WASHER, 1/2" CUSTOM, YZ
22	1	F-2103	SHCS, BUTTON HD, 1/4-20 X 1", CZ
23	1	F-2135	SCREW, PANHEAD, PHILLIPS #12-24 X 1.75 CZ
24	1	F-2136	WASHER, FLAT, #12 PLAIN, CZ
25	1	F-2137	NUT, #12-24, NYLOCK
26	1	H-2704	SPRING, BELLEVILLE, .50 X 1 X .073
27	2	H-2705	RING, RETAINING, .75 EXT.
28	1	H-2710	SPRING, DETENT, JOYSTICK
29	1	H-1947	JOYSTICK GASKET

JOYSTICK ASSEMBLY MOUNTING & RELATED PARTS

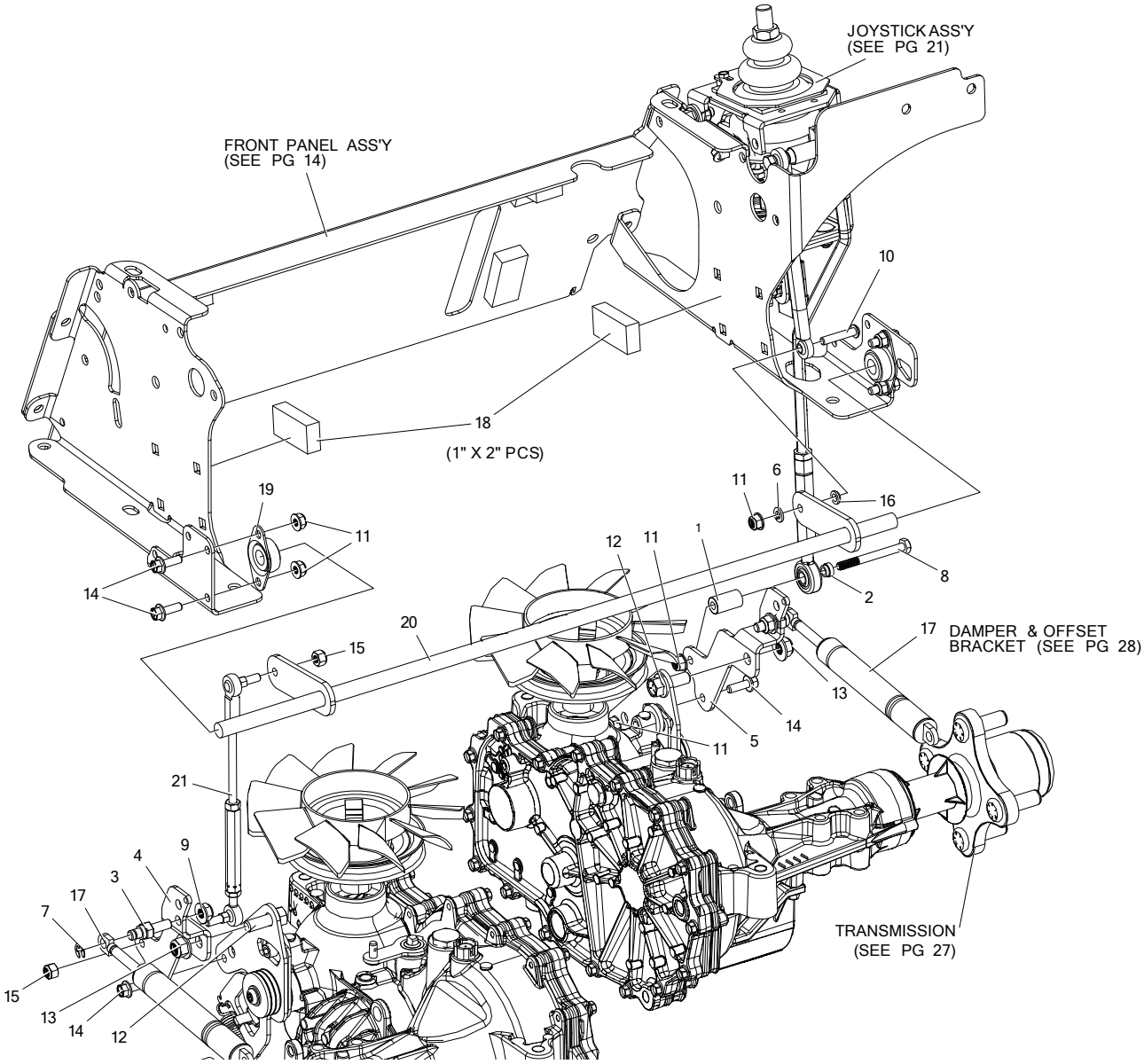

ITEM #	QTY	PART #	DESCRIPTION
1	1	625-100P	TUBE, PIVOT, JOYSTICK
2	3	625-116P	BUSHING, .375 ROD END, SHORT
3	2	638-028P	DAMPER BOLT 5/16-18 X 3/4"
4	1	721-163P	BRACKET, DAMPER OFFSET, LH (RTN)
5	1	721-164P	BRACKET, DAMPER OFFSET, RH (RTN)
6	1	F-1019-01	WASHER, LOCK, 1/4, YZ
7	2	F-1610	RETAINING RING, EXTERNAL
8	1	F-1703	CAPSCREW, HEX HD, 1/4-20 X 2-1/2"
9	2	F-2063	NUT, 5/16-18, NYLOC, FLANGED, YZ
10	1	F-2103	SHCS, BUTTON HD, 1/4-20 X 1"
11	8	F-2132	NUT, 1/4-20 NYLOC, FLANGED, YZ
12	2	F-2141	FHCS, 3/8-16 X 1", YZ, GR5
13	2	F-2151	NUT, 3/8-16 NYLOC, FLANGED, YZ
14	6	F-2162	FHCS, 1/4-20 X 3/4", YZ, GR5
15	2	F-2202	NUT, 1/4-20, NYLOC, YZ
16	1	H-1989	BALL JOINT BUSHING
17	2	H-2896	DAMPER
18	2	H-2990	NEOPRENE FOAM (ADHESIVE) 1/2"
19	2	H-3031	SIDE FLANGE BRG., 0.500, BRONZE
20	1	H-3221	WLDT, CROSS SHAFT, JS
21	1	H-3234	CONTROL LINKAGE ASSEMBLY

TWIN LEVER CONTROL & RELATED PARTS

RIGHT HAND SHOWN
LEFT HAND OPPOSITE

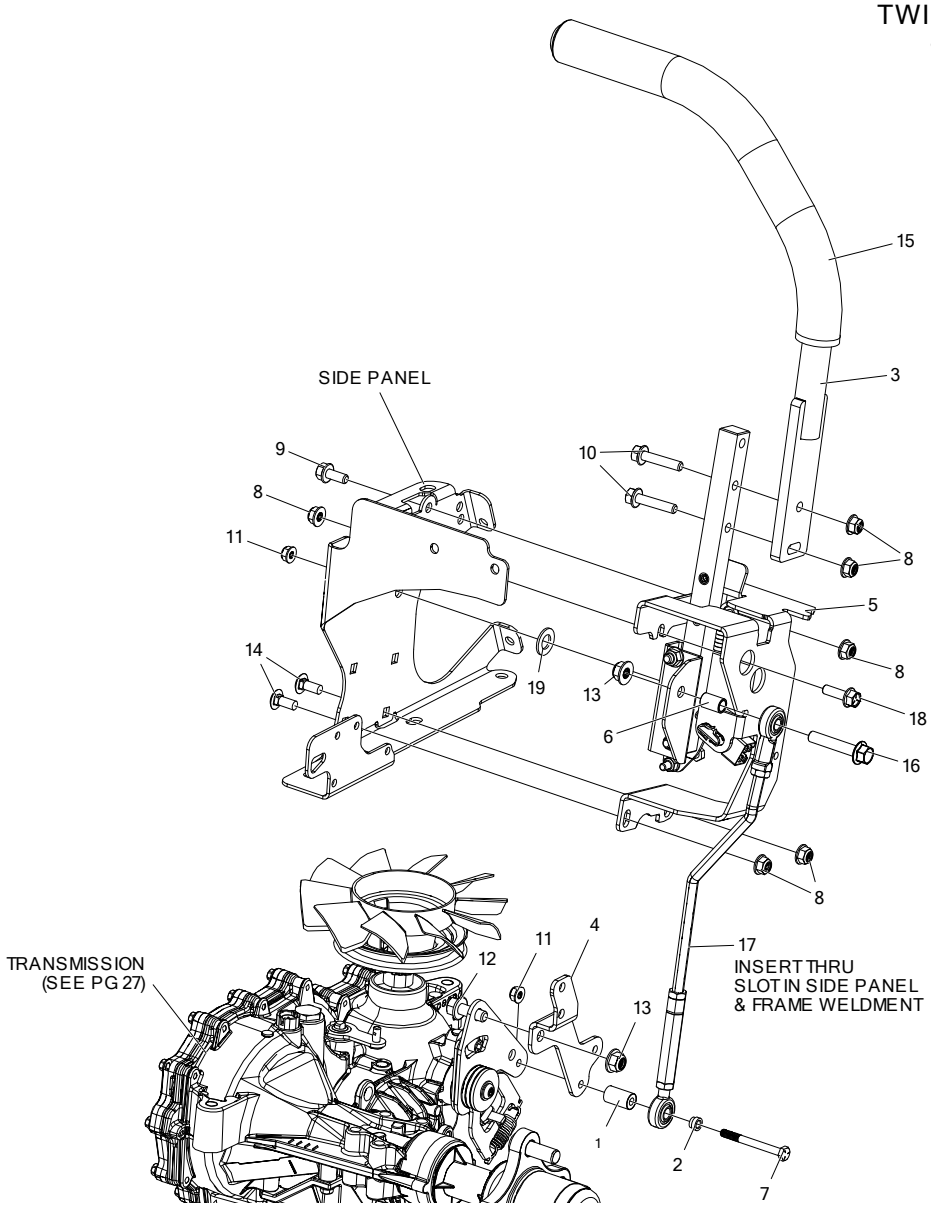

ITEM #	QTY	PART #	DESCRIPTION
1	1	625-100P	TUBE, PIVOT, JOYSTICK
2	1	625-116P	BUSHING, .375 ROD END, SHORT
3	1	659-375W	WLDT, DUAL LEVER
4	1	721-122P	BRACKET, DAMPER OFFSET, RH
-	1	721-121P	BRACKET, DAMPER OFFSET, LH
5	1	714-546A	ASSY, TS CONTROL, RH
-	1	714-547A	ASSY, TS CONTROL, LH
6	1	707-073P	STAND-OFF, LINKAGE MOUNT
7	1	F-1703	CAPSCREW, 1/4-20 X 2-1/2, GR5, ZC
8	6	F-2063	NUT, 5/16-18, NYLOC, FLANGED, YZ
9	1	F-2120	FHCS, 5/16-18 X 3/4", YZ, GR5
10	2	F-2129	FHCS, 5/16-18 X 1-1/2", YZ, GR5
11	1	F-2132	NUT, 1/4-20 NYLOC, FLANGED, YZ
12	1	F-2141	FHCS, 3/8-16 X 1", YZ, GR5
13	2	F-2151	NUT, 3/8-16 NYLOC, FLANGED, YZ
14	2	F-1671	CARRIAGE BOLT, 5/16-18 X 3/4", YZ, GR5
15	1	H-2739	GRIP, 15", CLOSED END
16	1	F-2126	FHCS, 3/8-16 X 2", YZ, GR5
17	1	H-3226	LINKAGE ASSEMBLY, JS & TS, RH
-	1	H-3227	LINKAGE ASSEMBLY, JS & TS, LH
18	1	F-2148	FHCS, 5/16-18 X 1", YZ, GR5
19	1	F-1521	WASHER, 1/2", TYPE B, NARR0W, YZ

TWIN LEVER ASSEMBLY
{714-546A - RIGHT SIDE}
{714-547A - LEFT SIDE}

RIGHT HAND SHOWN
LEFT HAND OPPOSITE

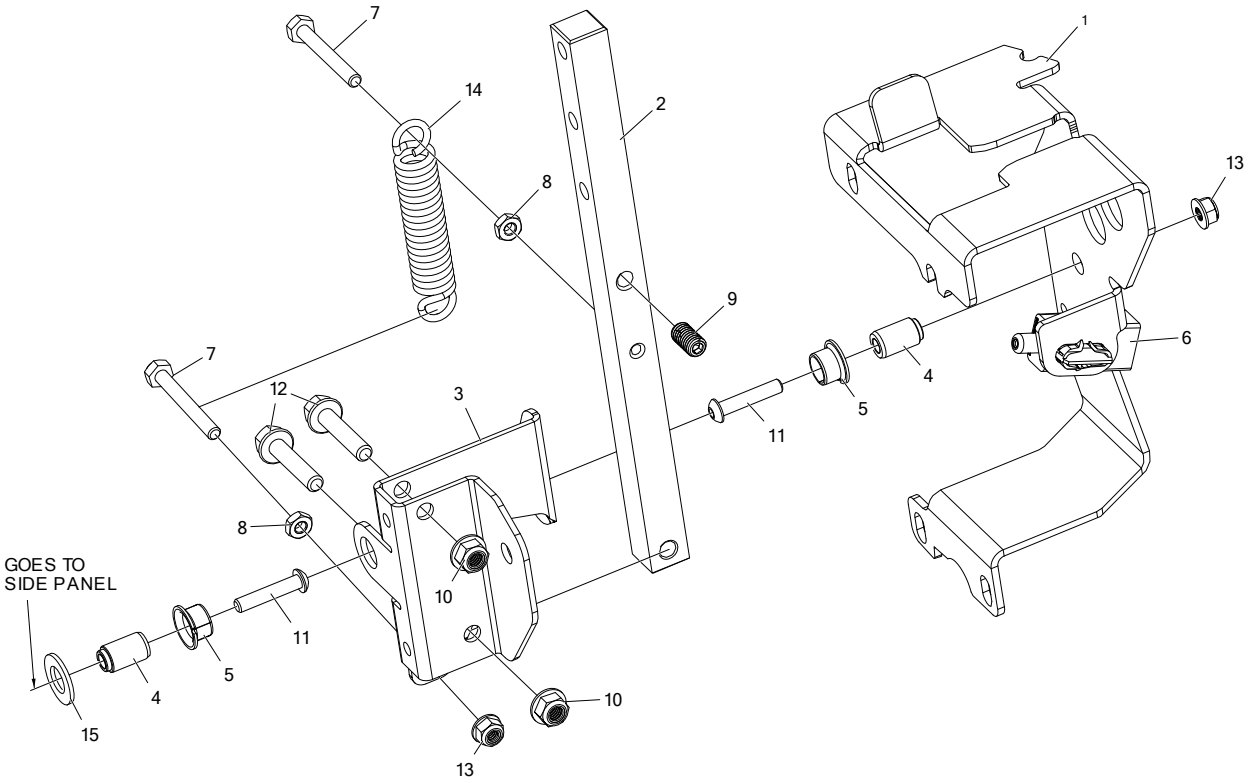

ITEM #	QTY	PART #	DESCRIPTION
1	1	714-539P	HOUSING, TWINSTICK, RH
-	1	714-540P	HOUSING, TWINSTICK, LH
2	1	714-541P	HANDLE BASE LEVER, TS
3	1	714-542P	PIVOT CHANNEL, RH
-	1	714-543P	PIVOT CHANNEL, LH
4	2	714-544P	PIVOT PIN
5	2	D-3784	BUSHING, DU 1/2 DIA X 3/8 WIDE
6	1	E-6692	PLUNGER SWITCH, RAIL MOUNT
7	2	F-1015-09	HHCS, 1/4-20 X 2", YZ, GR5
8	2	F-1011-01	NUT, HEX, 1/4-20, YZ
9	1	F-1903	SETSCREW, 3/8-16 X 3/4" W/ NYLON
10	2	F-2063	NUT, 5/16-18, NYLOC, FLANGED, YZ
11	2	F-2103	SHCS, BUTTON HD, 1/4-20 X 1", CZ
12	2	F-2129	FHCS, 5/16-18 X 1-1/2", YZ, GR5
13	2	F-2132	NUT, 1/4-20 NYLOC, FLANGED
14	1	H-3271	OVER-CENTER SPRING, TWINSTICK
15	1	F-1521	WASHER, 1/2", TYPE B, NARR0W, YZ

CONTROL PANEL ASSEMBLY

714-533A (KAW)

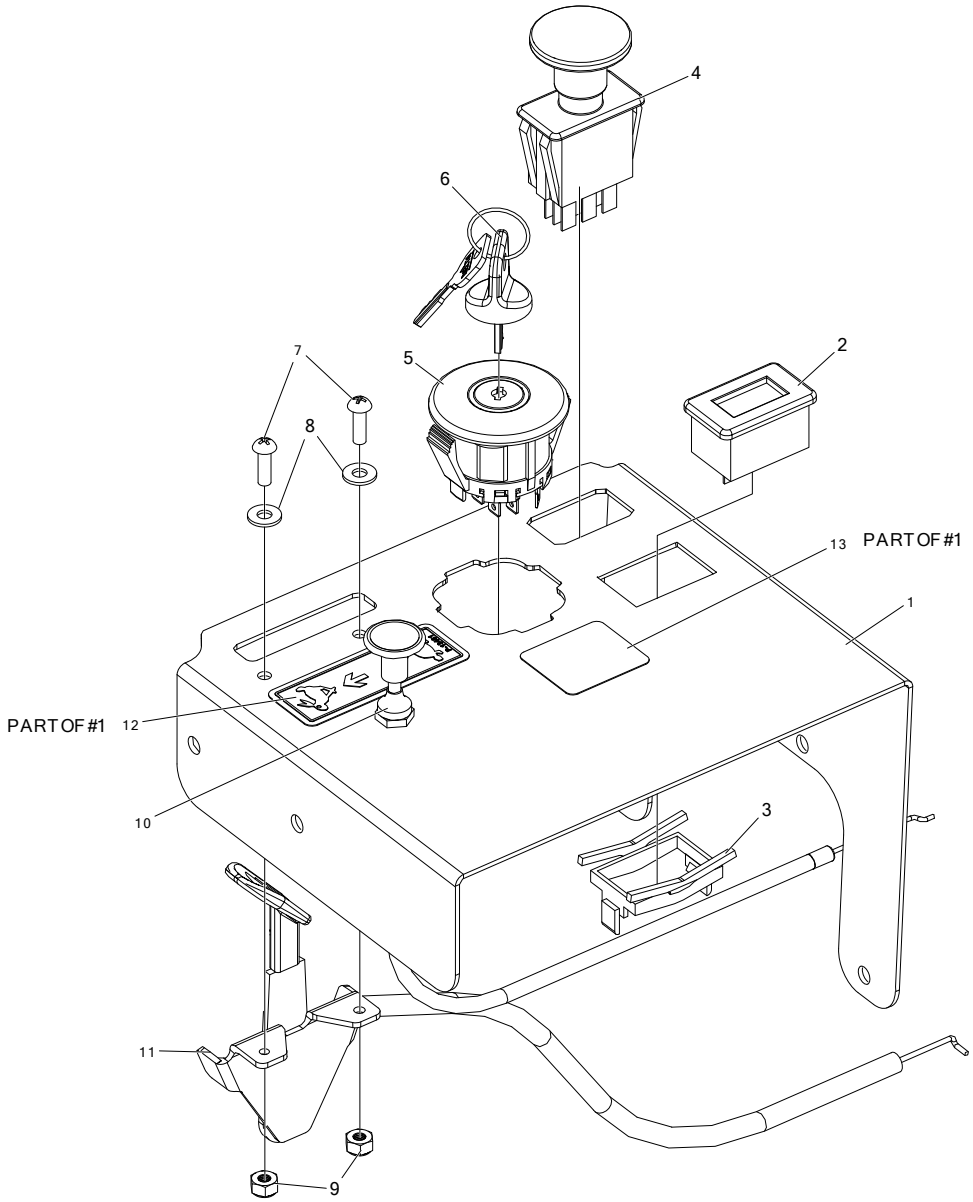

ITEM #	QTY	PART #	DESCRIPTION
1	1	714-599A	CONTROL PANEL W/ DECALS
2	1	E-5878	HOUR METER
3	1	E-6369	RETAINER CLIP
4	1	E-6403	PTO SWITCH
5	1	E-6717	IGNITION SWITCH, 4 POSITION
6	1	E-6718	KEY ASSEMBLY
7	2	F-1022-26	MACHINE SCREW, RND, 10-32 X 5/8, SLOTTED, CZ
8	2	F-1071	WASHER, FLAT #10, ZINC PLATED #10 SAE FLAT WASHER
9	2	F-1448	LOCKNUT, 10-32 NYLOC YELLOW PLTD
10	1	H-2287	CHOKE CABLE, 43-1/2"
11	1	H-2610	THROTTLE CABLE, 38", KAWASAKI
12	1	P-13481	DECAL, THROTTLE CONTROL
13	1	P-13750	DECAL, TAKE KEY

FENDER ASSEMBLY & RELATED PARTS

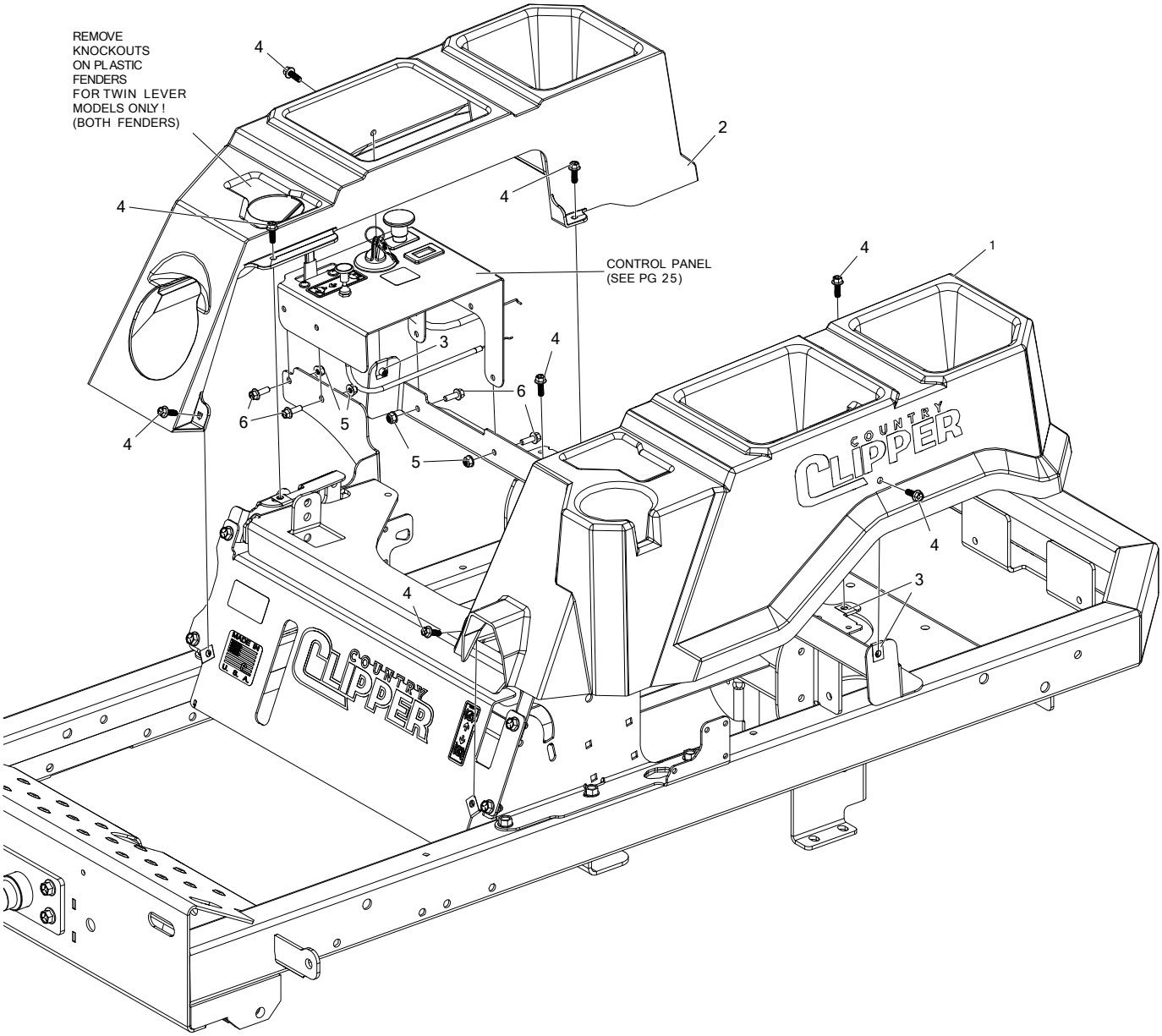

ITEM #	QTY	PART #	DESCRIPTION
1	1	H-3251	FENDER, LH
2	1	H-3252	FENDER, RH
3	4	F-1858	U-NUT, 1/4-20 THRD
4	8	F-2119	FHCS, 1/4-20 X 3/4", YZ, GR5, LOCK PATCH
5	4	F-2132	NUT, 1/4-20 NYLOC, FLANGED, YZ
6	4	F-2162	FHCS, 1/4-20 X 3/4", YZ, GR5

TRANSMISSION ASSEMBLY & RELATED PARTS

(LOOKING AT BOTTOM)

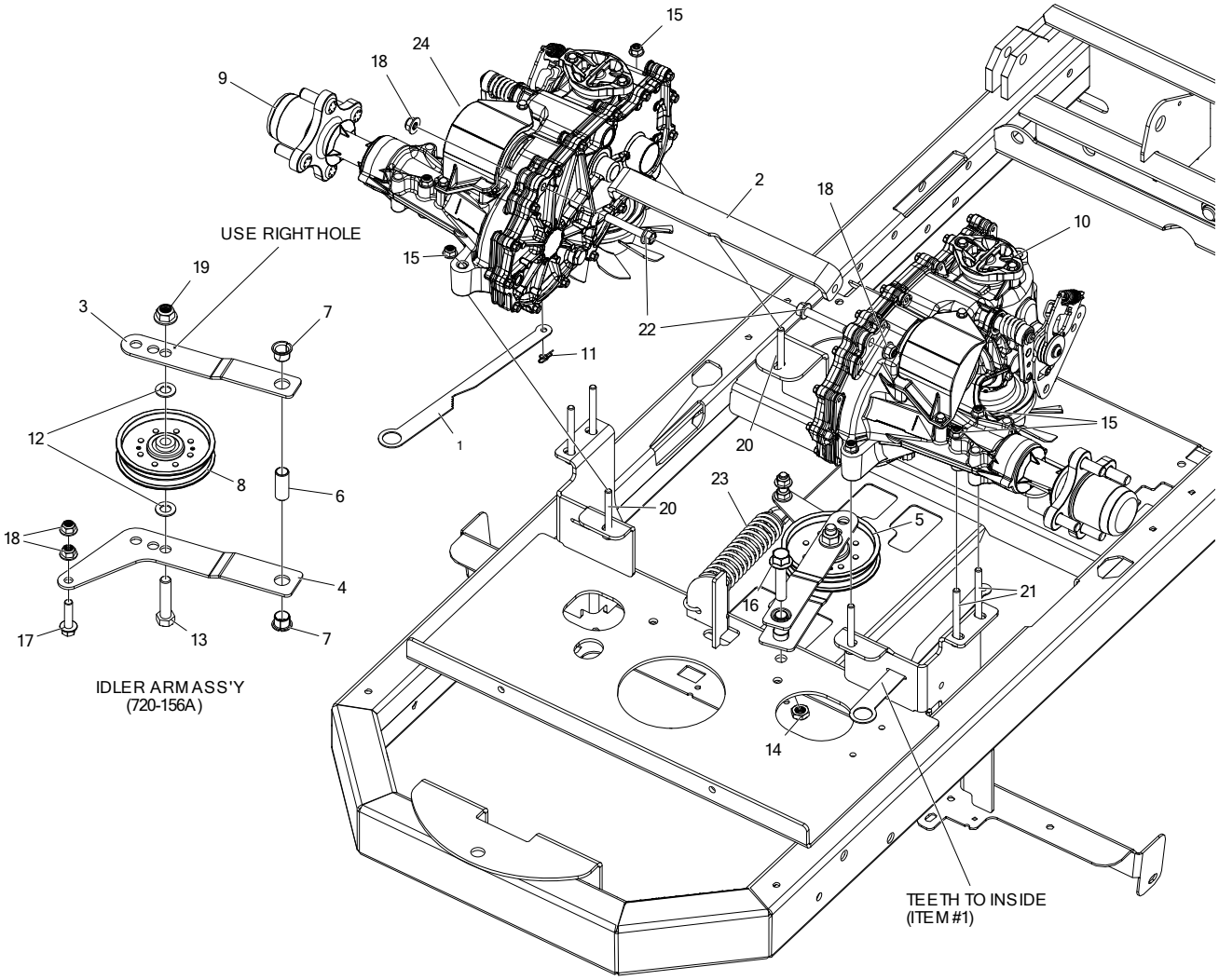

ITEM #	QTY	PART #	DESCRIPTION
1	2	714-454P	TAB, DUMP VALVE, COMMON
2	1	714-521P	HYDRO CROSS BRACE
3	1	714-592P	IDLER ARM, BOTTOM
4	1	720-145P	IDLER ARM, TOP
5	1	720-156A	IDLER ARM ASS'Y
6	1	722-031P	MOUNTING PIN
7	2	D-3730	BUSHING, DU 5/8 DIA X 1/2 LG
8	1	D-3924	PULLEY, FLAT IDLER, 4.25 OD, NTN, DBL INSERT
9	1	D-4207-01	TRANSAXLE, ZT-3100, TOP FAN, TANKLESS, RH
10	1	D-4207-02	TRANSAXLE, ZT-3100, TOP FAN, TANKLESS, LH
11	2	F-1492	RUE RING, 5/16
12	2	F-1521	WASHER, 1/2" CUSTOM, YZ

ITEM #	QTY	PART #	DESCRIPTION
13	1	F-1664	HHCS, 1/2-13 X 2-1/4", YZ, GR5
14	1	F-1966	NUT, THIN, 1/2-13, NYLOC, FLANGED, YZ
15	8	F-2063	NUT, 5/16-18, NYLOC, FLANGED, YZ
16	1	F-2144	FHCS, 1/2-13 X 2-1/4", YZ, GR5
17	1	F-2147	FHCS, 3/8-16 X 1-1/2", YZ, GR5
18	4	F-2151	NUT, 3/8-16 NYLOC, FLANGED, YZ
19	1	F-2152	NUT, 1/2-13 NYLOC, FLANGED, YZ
20	4	F-2177	FHCS, 5/16-18 X 2-1/2, YZ, GR5
21	4	F-2178	FHCS, 5/16-18 X 3", YZ, GR5
22	2	F-2218	FHCS, 3/8-16 X 2-1/4", YZ, GR5
23	1	H-2907	SPRING,5.43 X 1-1/2", TAPERED ENDS
24	2	H-2567	TRANSAXLE OIL FILTER

DAMPER, OFFSET BRACKET, & RETURN TO NEUTRAL HARDWARE

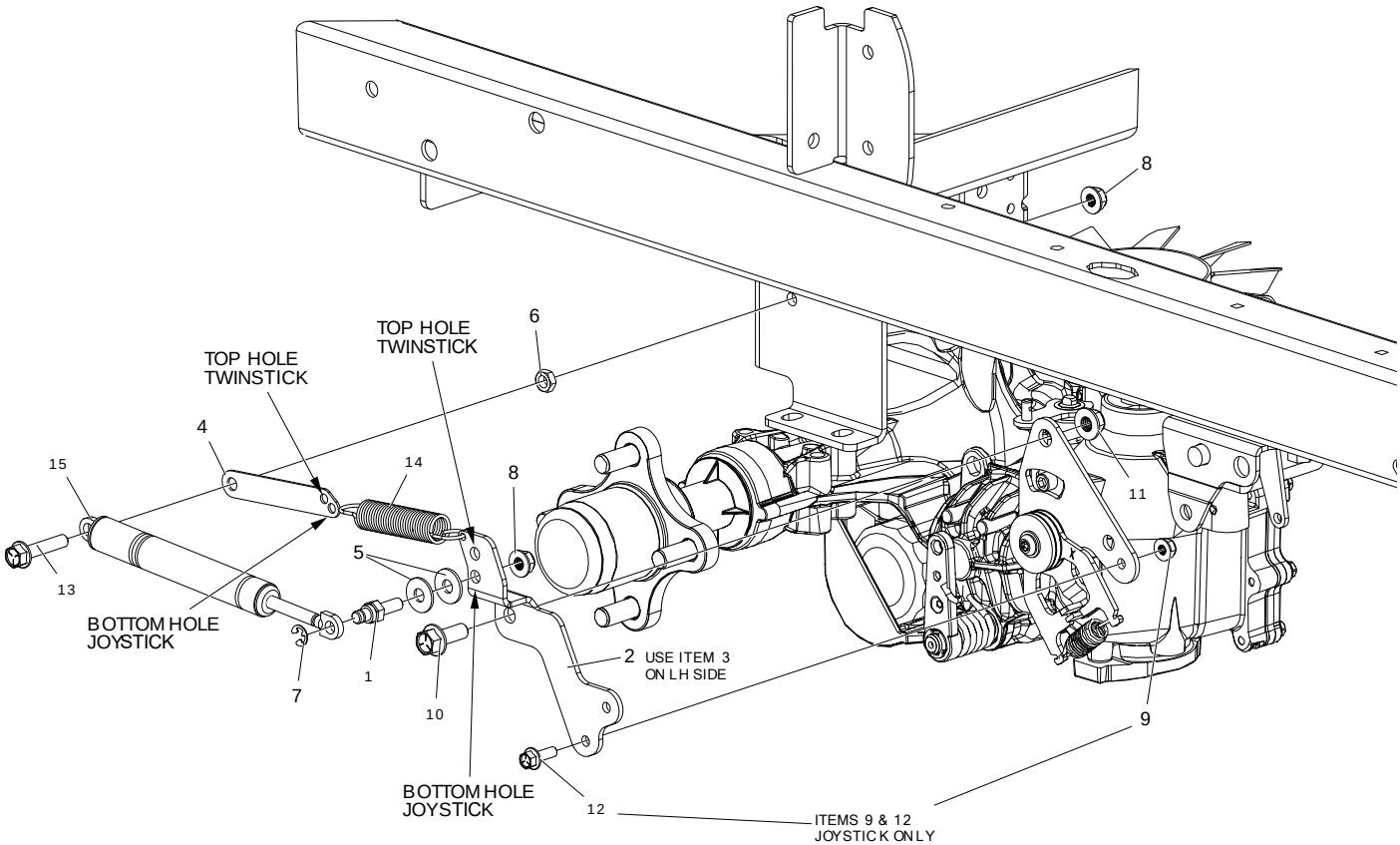

ITEM #	QTY	PART #	DESCRIPTION
1	2	638-028P	DAMPER BOLT 5/16-18 X 3/4"
2	1	721-164P	BRACKET, DAMPER OFFSET, RH (RTN)
3	1	721-163P	BRACKET, DAMPER OFFSET, LH (RTN)
4	2	721-165P	PLATE, NEUTRAL SPRING EXTENSION
5	4	F-1009-02	WASHER, FLAT, 5/16
6	2	F-1011-02	NUT, HEX 5/16-18
7	2	F-1610	RETAINING RING, EXTERNAL
8	4	F-2063	NUT, 5/16-18, NYLOC, FLANGED, YZ
9	2	F-2132	NUT, 1/4-20 NYLOC, FLANGED, YZ
10	2	F-2141	FHCS, 3/8-16 X 1", YZ, GR5
11	2	F-2151	NUT, 3/8-16 NYLOC, FLANGED, YZ
12	2	F-2162	FHCS, 1/4-20 X 3/4", YZ, GR5
13	2	F-2248	FHCS, 5/16-18 X 2-1/4", YZ, GR8
14	2	H-1635	SPRING, EXT, 3/4" OD X 4" OAL
15	2	H-2896	DAMPER

SEAT BASE & RELATED PARTS

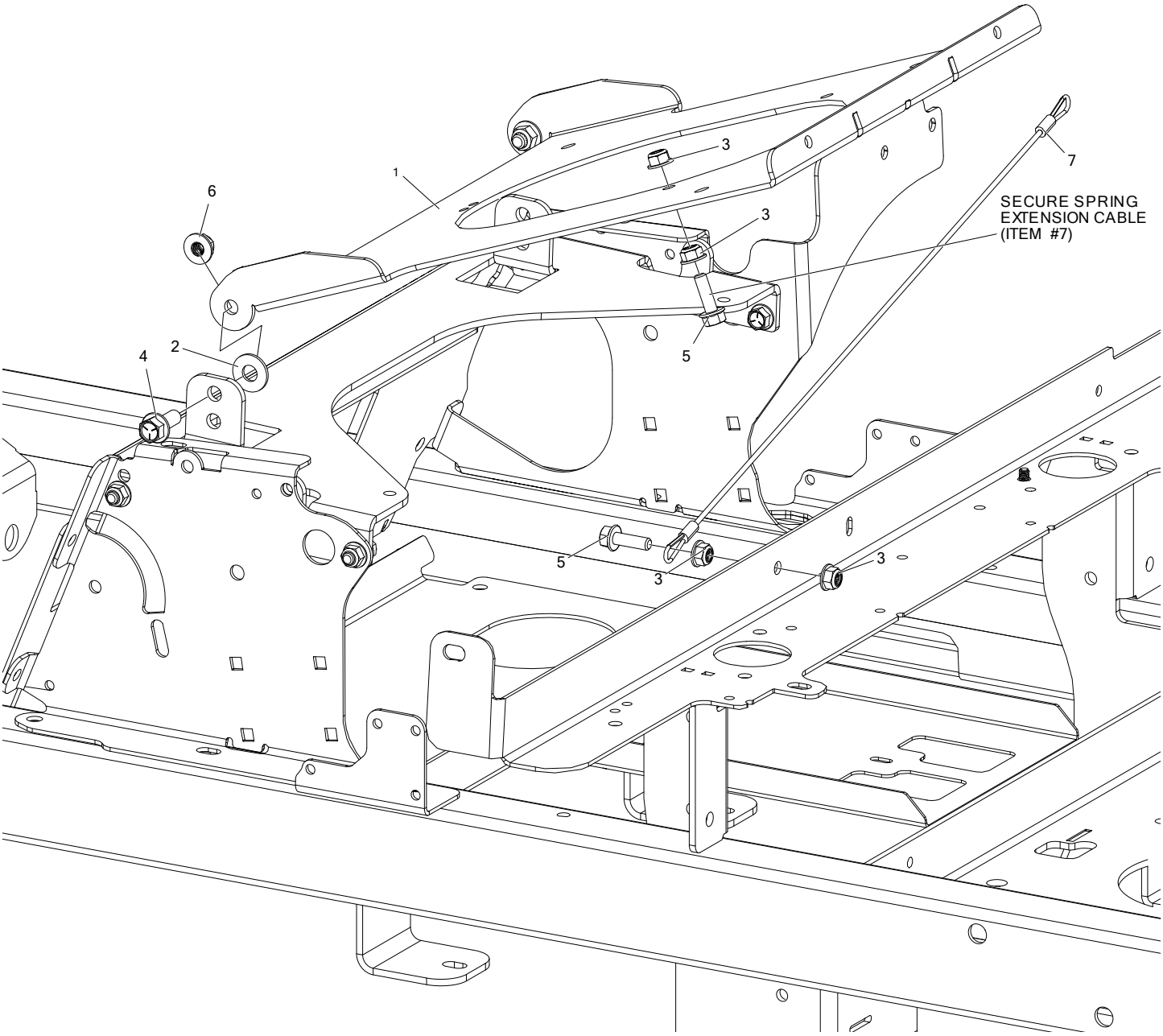

ITEM #	QTY	PART #	DESCRIPTION
1	1	721-013P	PLT, SEAT MOUNT, LOW
2	2	F-1009-03	WASHER, FLAT, 3/8, YZ
3	4	F-2063	NUT, 5/16-18, NYLOC, FLANGED, YZ
4	2	F-2141	FHCS, 3/8-16 X 1", YZ, GR5
5	2	F-2148	FHCS, 5/16-18 X 1", YZ, GR5
6	2	F-2151	NUT, 3/8-16 NYLOC, FLANGED, YZ
7	1	H-2460	SPRING EXTENSION CABLE

SEAT, ARM RESTS, & RELATED PARTS

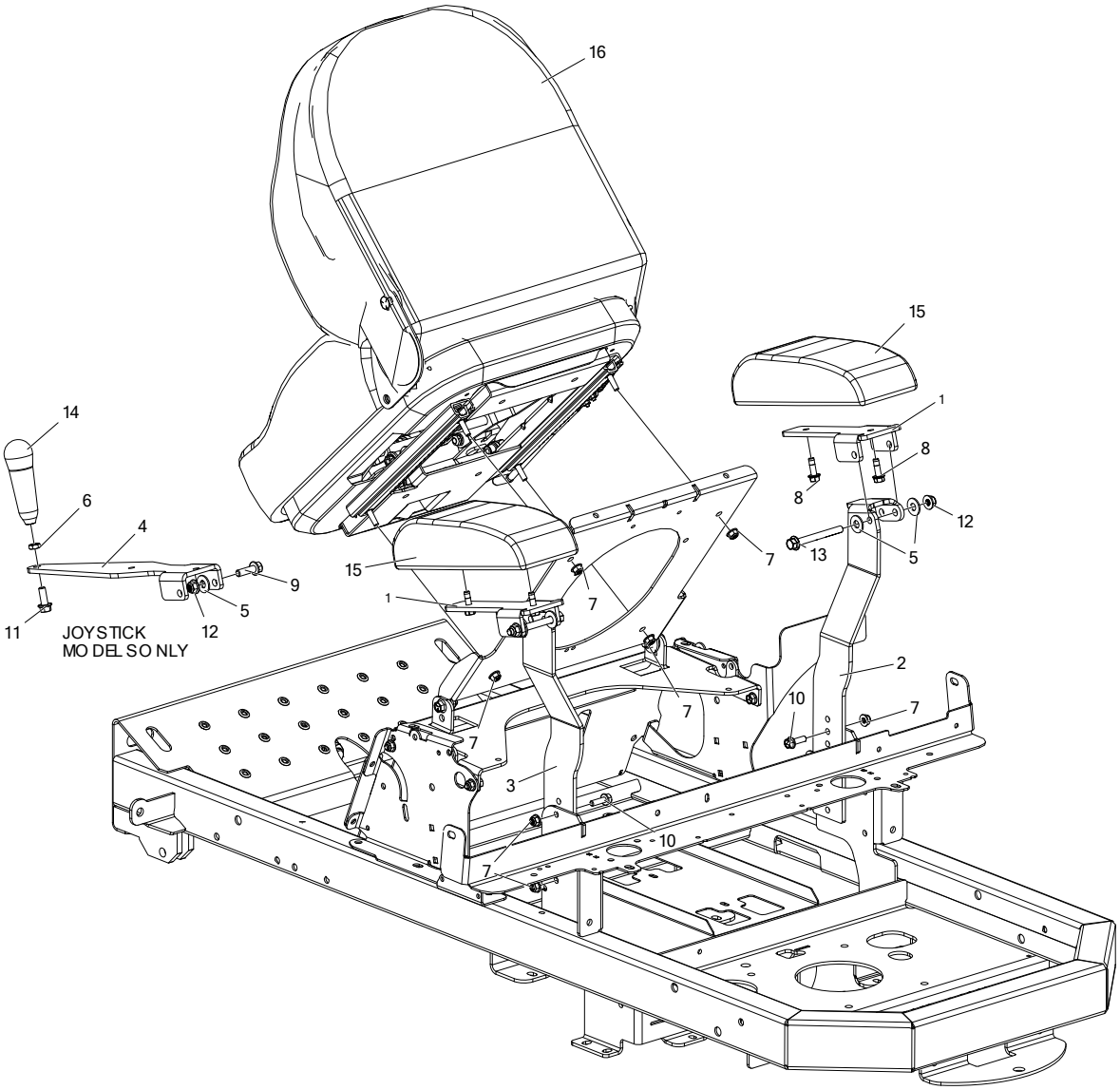

ITEM #	QTY	PART #	DESCRIPTION
1	2	720-138P	BRACKET, PIVOTING ARM REST (TWINSTICK)
-	1	720-138P	BRACKET, PIVOTING ARM REST (JOYSTICK)
2	1	720-169P	ARM REST, BASE MOUNT, LH, HINGED (ADJ)
3	1	720-170P	ARM REST, BASE MOUNT, LH, HINGED (ADJ)
4	1	721-141P	ARM REST BRACKET, JS, (FIXED)
5	5	F-1009-03	WASHER, FLAT, 3/8"
6	1	F-1486	NUT, JAM, 3/8-16, YZ
7	8	F-2063	NUT, 5/16-18, NYLOC, FLANGED, YZ
8	4	F-2121	FHCS, 5/16-18 X 1", LOCK PATCH, YZ, GR5
9	1	F-2125	FHCS, 3/8-16 X 1-1/4, YZ, GR5
10	4	F-2148	FHCS, 5/16-18 X 1", YZ, GR5
11	1	F-2141	FHCS, 3/8-16 X 1", YZ, GR5
12	3	F-2151	NUT, 3/8-16 NYLOC, FLANGED
13	2	F-2303	FHCS, 3/8-16 X 3-1/2", YZ, GR5
14	1	H-2764	HANDLE, JOYSTICK
15	2	H-2799	PAD, ARM REST
16	1	H-3129	SEAT ASS'Y, XLT
-	1	H-3213	SEAT BACK COVER FOR H-3129

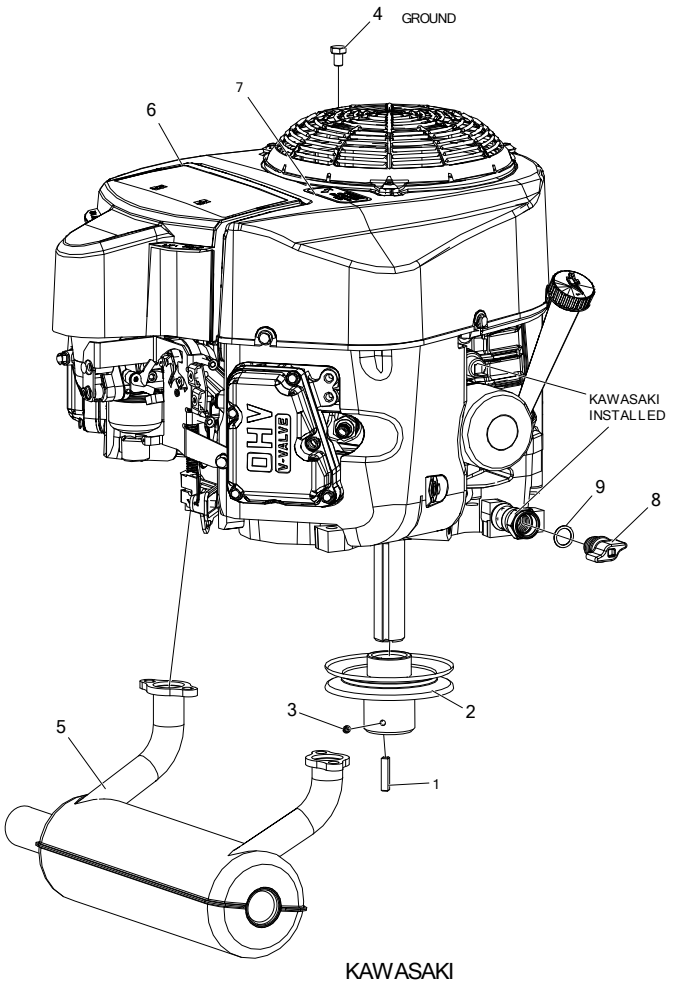

KAWASAKI
24 HP FR730

(USE THROTTLE CABLE H-2610 & CHOKE CABLE H-2287)

ITEM #	QTY	PART #	DESCRIPTION
1	1	621-113P	SQUARE KEY 1/4 X 1/4 X 1-1/4
2	1	D-3974	MOTOR, PULLEY, 4.51 W/ 1-1/8" SHAFT
3	1	F-1228	SET SCREW, SOCKET, 1/4-20 X 1/4", W/NYLOC
4	1	F-2243	HHCS, M8-1.25 X 12, YZ, GR8
5	1	H-3020	MUFFLER. KAWASAKI FR730
6	1	M-5419	ENGINE, KAW, 24HP FR730, 3400RPM
7	1	P-10077-11	DECAL, "PERIODICALLY CLEAN"
8	1	H-3253	OIL PLUG, THUMB SCREW
9	1	H-3254	O-RING, OIL PLUG, THUMB SCREW

ENGINE & CLUTCH MOUNTING & RELATED PARTS

(LOOKING AT BOTTOM)

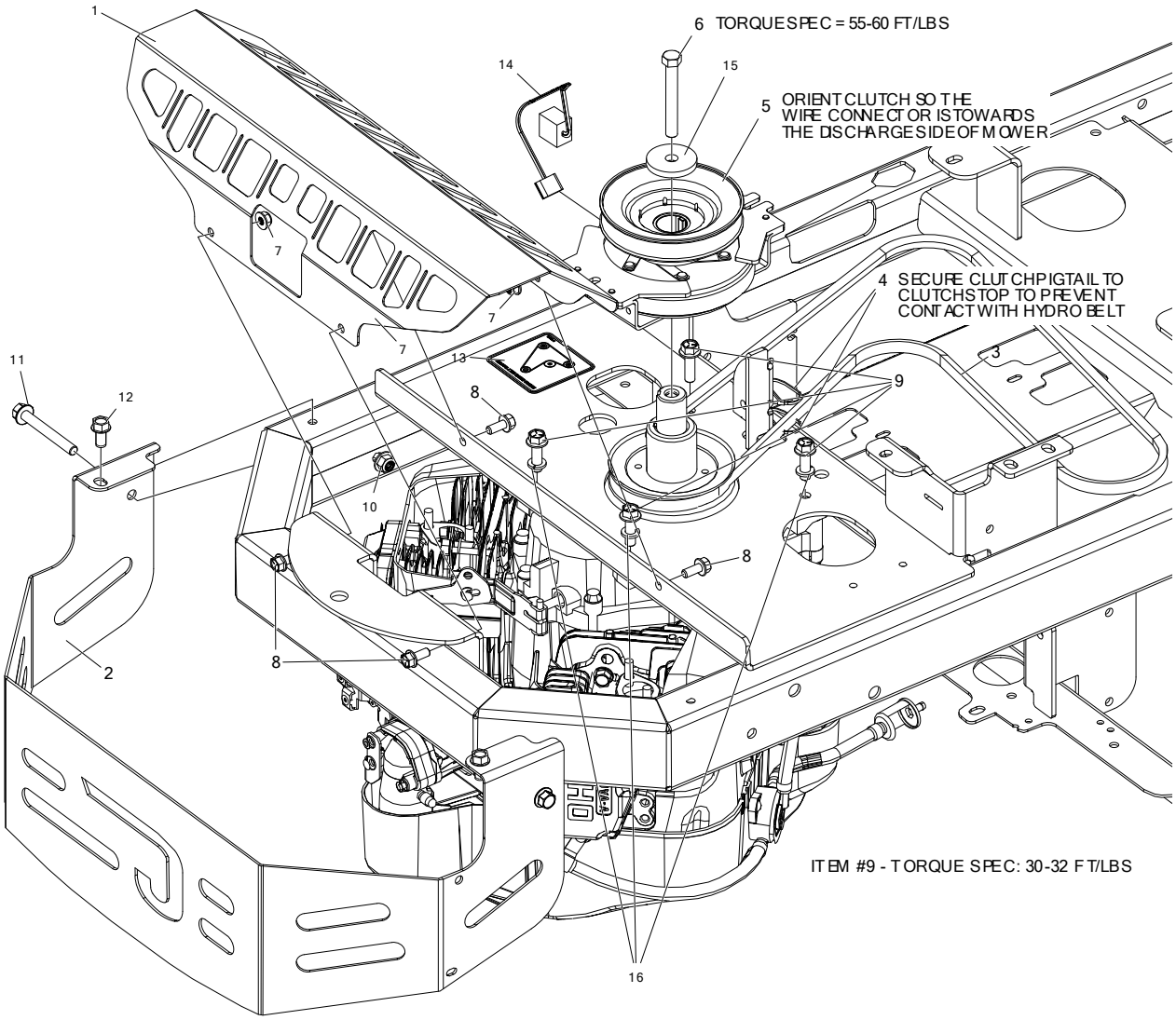

ITEM #	QTY	PART #	DESCRIPTION
1	1	714-611P	GUARD, MUFFLER
2	1	721-117P	GUARD, ENGINE
3	1	D-3769	V BELT A-67 KEVLAR
4	2	E-5842	WIRE TIE
5	1	E-6780	CLUTCH, OGURA GT2.75, 150 FT/LBS, 1-1/8" BORE
6	1	F-2139	HHCS, 7/16-20 X 2", YZ, GR8
7	4	F-2063	NUT, 5/16-18, NYLOC, FLANGED, YZ
8	4	F-2120	FHCS, 5/16-18 X 3/4", YZ, GR5
9	4	F-2125	FHCS, 3/8-16 X 1-1/4", YZ, GR5
10	2	F-2151	NUT, 3/8-16 NYLOC, FLANGED, YZ
11	2	F-2180	FHCS, 3/8-16 x 3", YZ, GR5
12	2	F-2219	HFCS, 3/8-16 X 3/4", CZ, THD FORMING
13	1	P-12918	DECAL, HYDRO BELT ROUTING
14	1	E-6575	HARNESS ADAPTER, CLUTCH PIGTAIL (13.75")
15	1	720-124P	WASHER, OGURA CLUTCH, 0.471 ID X 1.875 OD X 0.25 THK
16	3	F-1019-03	LOCK WASHER, HVY, 3/8, YZ

WIRE HARNESS & RELATED PARTS

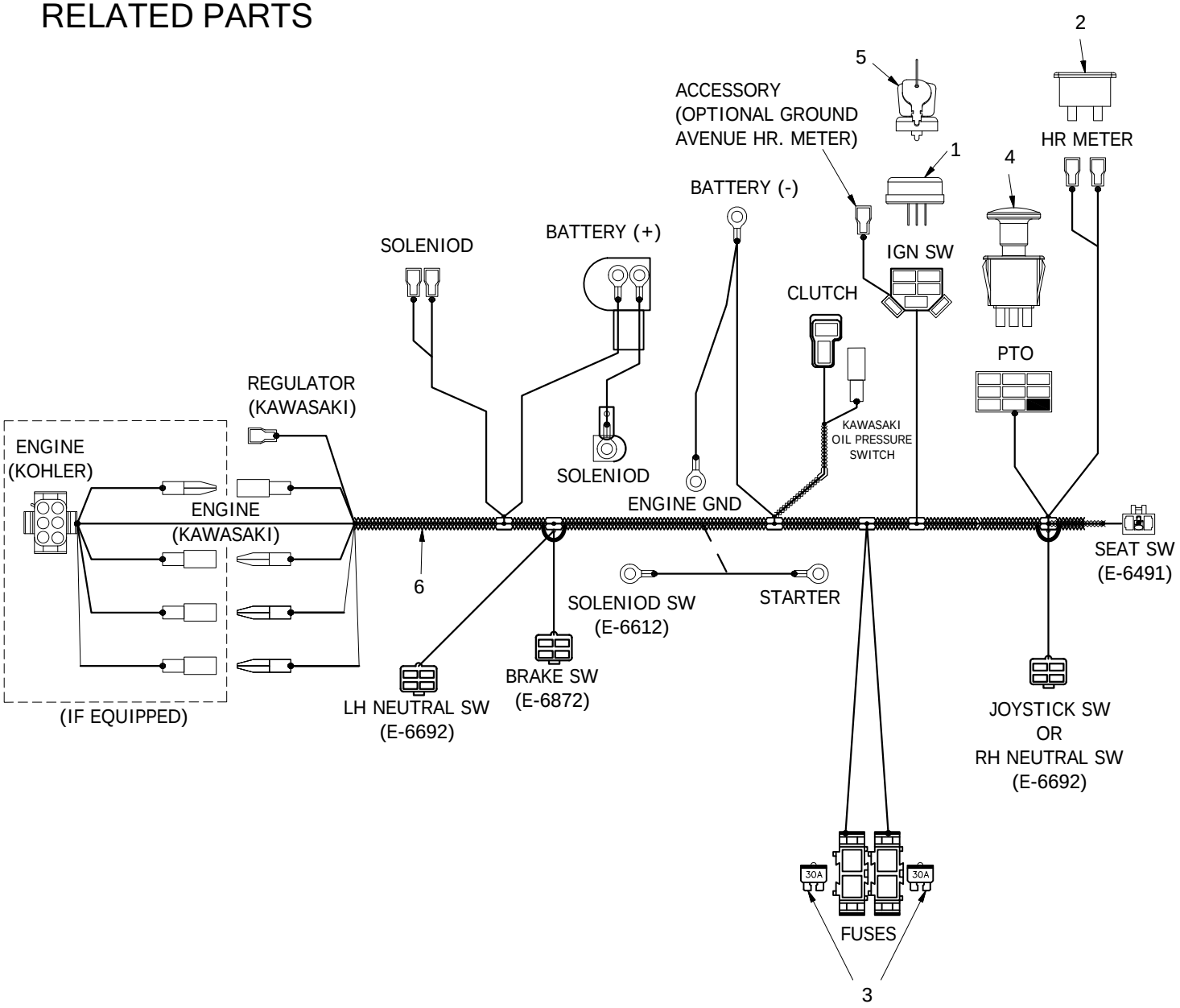

ITEM #	PART #	DESCRIPTION
1	E-6717	IGNITION SWITCH, 4 POSITION
2	E-5878	HOUR METER
3	E-6207	FUSE, #ATC-30
4	E-6403	PTO SWITCH
5	E-6718	KEY ASSEMBLY
6	E-6870	WIRE HARNESS, COMMON (BRAKE TO START)

WIRING SCHEMATIC

(BRAKE TO START)

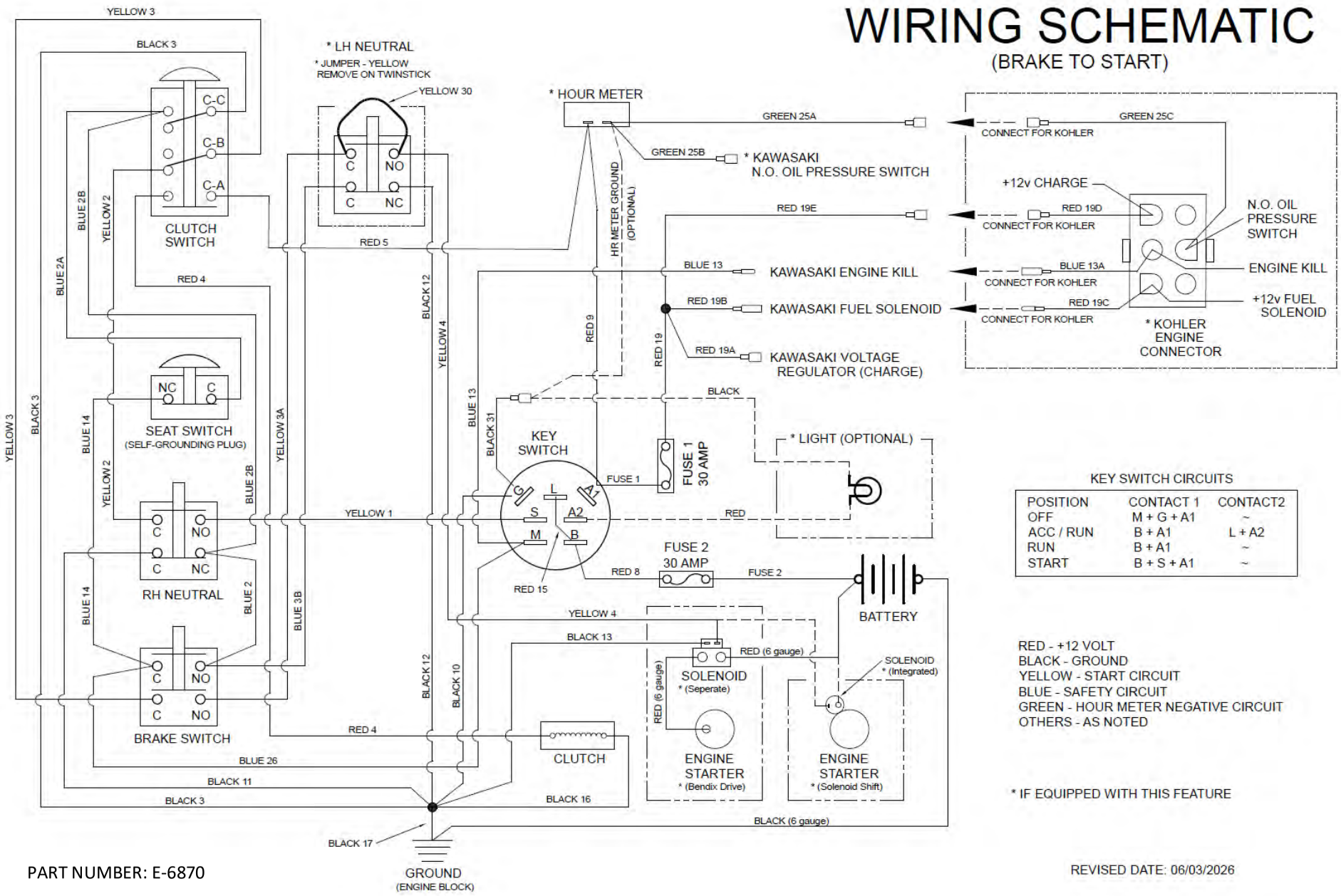

KEY SWITCH CIRCUITS

POSITION	CONTACT 1	CONTACT2
OFF	M + G + A1	~
ACC / RUN	B + A1	L + A2
RUN	B + A1	~
START	B + S + A1	~

RED - +12 VOLT
BLACK - GROUND
YELLOW - START CIRCUIT
BLUE - SAFETY CIRCUIT
GREEN - HOUR METER NEGATIVE CIRCUIT
OTHERS - AS NOTED

* IF EQUIPPED WITH THIS FEATURE

PART NUMBER: E-6870

REVISED DATE: 06/03/2026

MY2027 SPECIFICATIONS

XLT – *Joystick Steering*

MODEL	2448KAJ - C330 / C330W	2452KAJ - C330 / C330W	2460KAJ - C330 / C330W
Engine	24hp Kawasaki FR730V (726cc)		
Hydrostatic Transmissions	Hydro-Gear ZT-3100		
Steering Control	Single Joystick		
Fuel Capacity	5 Gallons		
Tires, Rear	22 x 9.5-10	22 x 11-10	
Tires, Front	13 x 6.5-6		
Turning Radius	Zero-Turn		
Ground Speed Forward Reverse	8 MPH (infinitely variable) 4 MPH (infinitely variable)		
Length	79”		
Height,	33” (Seat Cushion), 48” (Seat Back)		
Width, Tractor (outside rear tires)	47”	49”	
Width, Deck (with deck chute up) (with deck chute down)	49” 61”	53” 65”	61” 73”
Cutting Width	48”	52”	60”
Blade Length (3 per deck)	17”	18-3/8”	21”
Cutting Height	1-1/2” to 5” (¼” increments)		
Weight (actual)	811#	833#	838#
Standard Features	Hour Meter, Cup Holder, Electric Start, Sewn Seat, Hinged (RH) Arm Rest (Adjustable), Front Step, ContourDTS Deck Suspension, Hitch Plate, and Auto Detach Stand-Up Deck		

XLT – *Twinstick Steering*

MODEL	2448KAT - C330 / C330W	2452KAT - C330 / C330W	2460KAT - C330 / C330W
Engine	24hp Kawasaki FR730V (726cc)		
Hydrostatic Transmissions	Hydro-Gear ZT-3100		
Steering Control	Twinstick Controls		
Fuel Capacity	5 Gallons		
Tires, Rear	22 x 9.5-10	22 x 11-10	
Tires, Front	13 x 6.5-6		
Turning Radius	Zero-Turn		
Ground Speed Forward Reverse	8 MPH (infinitely variable) 4 MPH (infinitely variable)		
Length	79”		
Height,	33” (Seat Cushion), 48” (Seat Back)		
Width, Tractor (outside rear tires)	47”	49”	
Width, Deck (with deck chute up) (with deck chute down)	49” 61”	53” 65”	61” 73”
Cutting Width	48”	52”	60”
Blade Length (3 per deck)	17”	18-3/8”	21”
Cutting Height	1-1/2” to 5” (¼” increments)		
Weight (actual)	816#	838#	843#
Standard Features	Hour Meter, Cup Holder, Electric Start, Sewn Seat, Hinged Arm Rests (Adjustable), Front Step, ContourDTS Deck Suspension, Hitch Plate, and Auto Detach Stand-Up Deck		

Specifications subject to change without prior notice

PRODUCT MANUAL

XLT

C330 / C330W

Country Clipper Division
Shivvers Manufacturing, Inc.
613 W. English St.
Corydon, IA 50060-0467
Ph. 641-872-2544
Fax. 641-872-1593

P-13823 (Rev B)